# ALPINE ROAD CULVERT REPLACEMENT

## CONSTRUCTION DOCUMENTS
## CONTRACT SD-2018-02
## DEPARTMENT OF PUBLIC WORKS
## STORMWATER DEPARTMENT
## CITY OF DURHAM
## NORTH CAROLINA

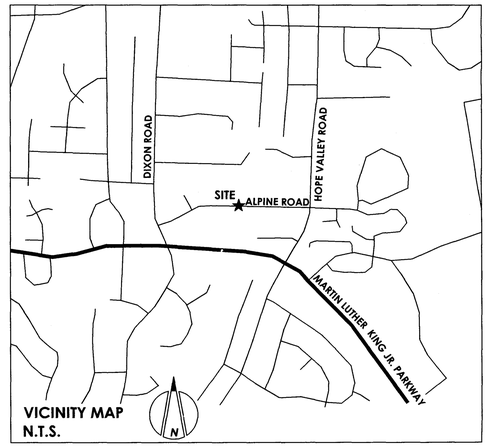

VICINITY MAP
N.T.S.


OWNER
**CITY OF DURHAM**
**PUBLIC WORKS DEPARTMENT**
101 City Hall Plaza
DURHAM, N.C. 27701
P: (919) 560-4326
F: (919) 560-4316

ENGINEER
**HORVATH ASSOCIATES, PA**
16 CONSULTANT PLACE, SUITE 201
DURHAM, N.C. 27707
P: (919) 490-4990
F: (919) 490-8953

HYDRAULIC/STRUCTURAL/
TRANSPORTATION ENGINEER
**KCI ASSOCIATES OF NC**
4505 FALLS OF NEUSE ROAD, SUITE 400
RALEIGH, N.C. 27609
P: (919) 783-9214
F: (919) 783-9266


## INDEX OF DRAWINGS:


| | |
|---|---|
| C000 | COVER SHEET |
| C001 | EXISTING CONDITIONS |
| C300 | PROPOSED CONDITIONS OVERALL PLAN VIEW |
| C301 | ROADWAY AND UTILITY PLAN AND PROFILES |
| C302 | CULVERT PLAN AND PROFILE AND DETAILS |
| C303 | UTILITY DETAILS |
| S1 | CULVERT STRUCTURAL DRAWINGS - GENERAL PLAN |
| S2 | CULVERT STRUCTURAL DRAWINGS - CULVERT LAYOUT |
| S3 | CULVERT STRUCTURAL DRAWINGS - DETAILS |
| S4 | CULVERT STRUCTURAL DRAWINGS - WING WALL DETAILS |
| TMP-1 | TITLE SHEET, VICINITY MAP, AND INDEX OF SHEETS |
| TMP-1A | LIST OF APPLICABLE ROADWAY STANDARD DRAWINGS AND LEGEND |
| TMP-1B | TRANSPORTATION OPERATIONS PLAN: (MANAGEMENT STRATEGIES, GENERAL NOTES, LOCAL NOTES, AND TEMPORARY TRAFFIC CONTROL PHASING) |
| TMP-2A | SPECIAL SIGN DESIGN |
| TMP-2B | SPECIAL SIGN DESIGN |
| TMP-3 | OFF SITE DETOUR DETAILS |


## GENERAL NOTES:

CONSTRUCT TO NCDOT 2018 STANDARDS AND SPECIFICATIONS

ALL WATER AND SEWER WORK SHALL FOLLOW CITY OF DURHAM STANDARDS AND SPECIFICATIONS

CL GRADE LINE:
THE GRADE LINE SHOWN DENOTES THE FINISHED ELEVATION OF THE PROPOSED SURFACING AT GRADE POINTS SHOWN ON THE TYPICAL SECTIONS. GRADE LINE MAY BE ADJUSTED AT THEIR BEGINNING AND ENDING AND AT STRUCTURES AND EXISTING PAVEMENT AS DIRECTED BY THE ENGINEER IN ORDER TO SECURE A PROPER TIE-IN.

SUBSURFACE PLANS:
SUBSURFACE REPORT BY FALCON ENGINEERING IS AVAILABLE ON THIS PROJECT.

DRAINAGE STRUCTURES:
GRADES, ELEVATIONS AND LOCATIONS SHOWN ARE APPROXIMATE. AS DIRECTED BY THE ENGINEER, THEY MAY BE ADJUSTED TO ACCOMMODATE UNFORESEEN CONDITIONS. ALL PIPES SHALL BE RCP CLASS III, UNLESS OTHERWISE NOTED.

UTILITIES:
THE CONTRACTOR IS RESPONSIBLE FOR ADHERING TO THE UNDERGROUND DAMAGE PREVENTION ACT AS DEFINED IN THE NC GENERAL STATUTES CHAPTER 87. BELOW IS A PARTIAL LIST OF UTILITY COMPANIES.

NORTH CAROLINA ONE CALL CENTER (NCOCC)

WATER AND SEWER: CITY OF DURHAM
800-632-4949

POWER: DUKE POWER
4412 HILLSBOROUGH RD.
DURHAM, NC 27705

GAS: PSNC
2451 SCHIEFELIN RD.
APEX, NC 27502

ANY RELOCATION OF EXISTING UTILITIES WILL BE ACCOMPLISHED BY OTHERS, EXCEPT AS SHOWN ON THE PLANS.

UTILITY LOCATIONS ARE BASED UPON FIELD SURVEYS & UTILITY RECORDS. ALL UTILITIES SHALL BE FIELD LOCATED BY THE CONTRACTOR PRIOR TO CONSTRUCTION ACTIVITY. THE CITY WILL NOT BE HELD RESPONSIBLE FOR THE ACCURACY OF UTILITY LOCATIONS, SIZES, DEPTHS, OR FOR COMPLETENESS OF UTILITY INFORMATION. CONTRACTOR SHALL COORDINATE THE ADJUSTMENT OF MANHOLES, VALVES AND METERS WITH PRIVATE UTILITY OWNERS

CONTRACTOR SHALL COORDINATE WITH EACH UTILITY WHERE REMOVALS, RELOCATIONS, OR NEW INSTALLATIONS ARE REQUIRED CONTRACTOR SHALL GIVE THE UTILITIES A TWO WEEK ADVANCE NOTICE BEFORE A WORK AREA IS AVAILABLE FOR UTILITY WORK.

TRAFFIC CONTROL:
TRAFFIC CONTROL SHALL BE IN ACCORDANCE WITH THE 2009 EDITION OF THE "FEDERAL MANUAL ON UNIFORM TRAFFIC CONTROL DEVISES" AND THE TRAFFIC CONTROL PLANS FOUND HEREIN.

THE CONTRACTOR WILL PROVIDE AND MAINTAIN SUCH WARNING SIGNS AND BARRICADES AS MAY BE NECESSARY TO PROTECT THE WORK AND THE PUBLIC IN THEIR USE OF THE STREET AND DRIVEWAYS AND IN NO CASE WILL THE CITY OF DURHAM BE RESPONSIBLE FOR ANY FAILURE OF THE CONTRACTOR TO PROVIDE SUCH WARNING AND PRECAUTIONS

THE CONTRACTOR WILL FOLLOW THE TRAFFIC CONTROL PLAN AND THE CONDITIONS SPELLED OUT IN THAT PLAN.

EXISTING SANITARY SEWER AND WATER LINE:
THE CONTRACTOR SHALL USE CARE WHEN WORKING AROUND SANITARY SEWERS AND WATER LINES. SHOULD THE CONTRACTOR DAMAGE EXISTING SEWER OR WATER LINES, HE SHALL IMMEDIATELY REPLACE THE LINE AT HIS EXPENSE WITH DUCTILE IRON PIPE. THE CONTRACTOR SHALL REPLACE SANITARY SEWER AND/OR WATER LINE, WITH A MINIMUM TEN FOOT SECTION OF DUCTILE IRON PIPE WHEN DRAINAGE PIPE COMES WITHIN TWO FEET OF SAID LINES, VERTICALLY OR HORIZONTALLY.

MAIL BOXES:
THE CONTRACTOR SHALL RELOCATE ALL MAIL BOXES AS REQUIRED BY SECTION 107-12 OF THE NCDOT STANDARD SPECIFICATIONS FOR ROADS AND STRUCTURES. COORDINATE THIS WORK WITH THE U.S. POSTAL SERVICE.

TREES, SHRUBS, AND HEDGES:
THE CONTRACTOR SHALL PROTECT ALL TREES AND SHRUBS OUTSIDE OF THE LIMITS OF DISTURBANCE. THE CONTRACTOR IS ALSO REQUESTED TO SAVE OTHER EXISTING TREES AND SHRUBS AS DIRECTED BY THE ENGINEER. WHEN ROOT PRUNING IS NECESSARY, CUT ROOTS CLEANLY USING A DISC TRENCHER.

SAWCUTS:
THE CONTRACTOR SHALL SAWCUT EXISTING ASPHALT AND/OR CONCRETE SURFACES PRIOR TO REMOVAL UNLESS OTHERWISE DIRECTED BY THE ENGINEER. SAW CUT WIDTH SHALL BE 1 FOOT MINIMUM FROM THE EXISTING EDGE OF PAVEMENT. SAW CUT PAVEMENT SHALL BE REPLACED AS WELL AS ADDITIONAL PAVEMENT REQUIRED TO TIE-IN TO FACE OF PROPOSED PAVEMENT.

©COPYRIGHT 2017 THIS DOCUMENT AND THE DESIGN ARE THE PROPERTY OF HORVATH ASSOCIATES, P.A. ANY REPRODUCTION WITHOUT PRIOR WRITTEN CONSENT IS PROHIBITED


HORVATH
ASSOCIATES
CIVIL ENGINEERING LAND PLANNING
LANDSCAPE ARCHITECTURE STORMWATER MANAGEMENT
16 CONSULTANT PLACE, SUITE 201
DURHAM, NORTH CAROLINA 27707
P 919.490.4990 F 919.490.8953
NORTH CAROLINA BOARD OF EXAMINERS FOR ENGINEERS AND SURVEYORS LICENSE NO.: C-0676
www.horvathassociates.com


**ALPINE ROAD CULVERT REPLACEMENT (SD-2018-02)**
ALPINE ROAD
DURHAM, NORTH CAROLINA

**COVER SHEET**

NORTH CAROLINA PROFESSIONAL ENGINEER SEAL 39170 11-19-2018 MATTHEW L. JONES

| | | | |
|---|---|---|---|
| | 8/3/2018 | | |
| 1 | COD 1ST REVIEW COMMENTS | MJ | |

DRAWN BY: MLJ
CHECKED BY: RLM
DATE: 3/21/2018
SCALE: AS NOTED
PROJECT NO.: 1809
SHEET NO.: **C000**

<CONSTRUCTION DRAWINGS>

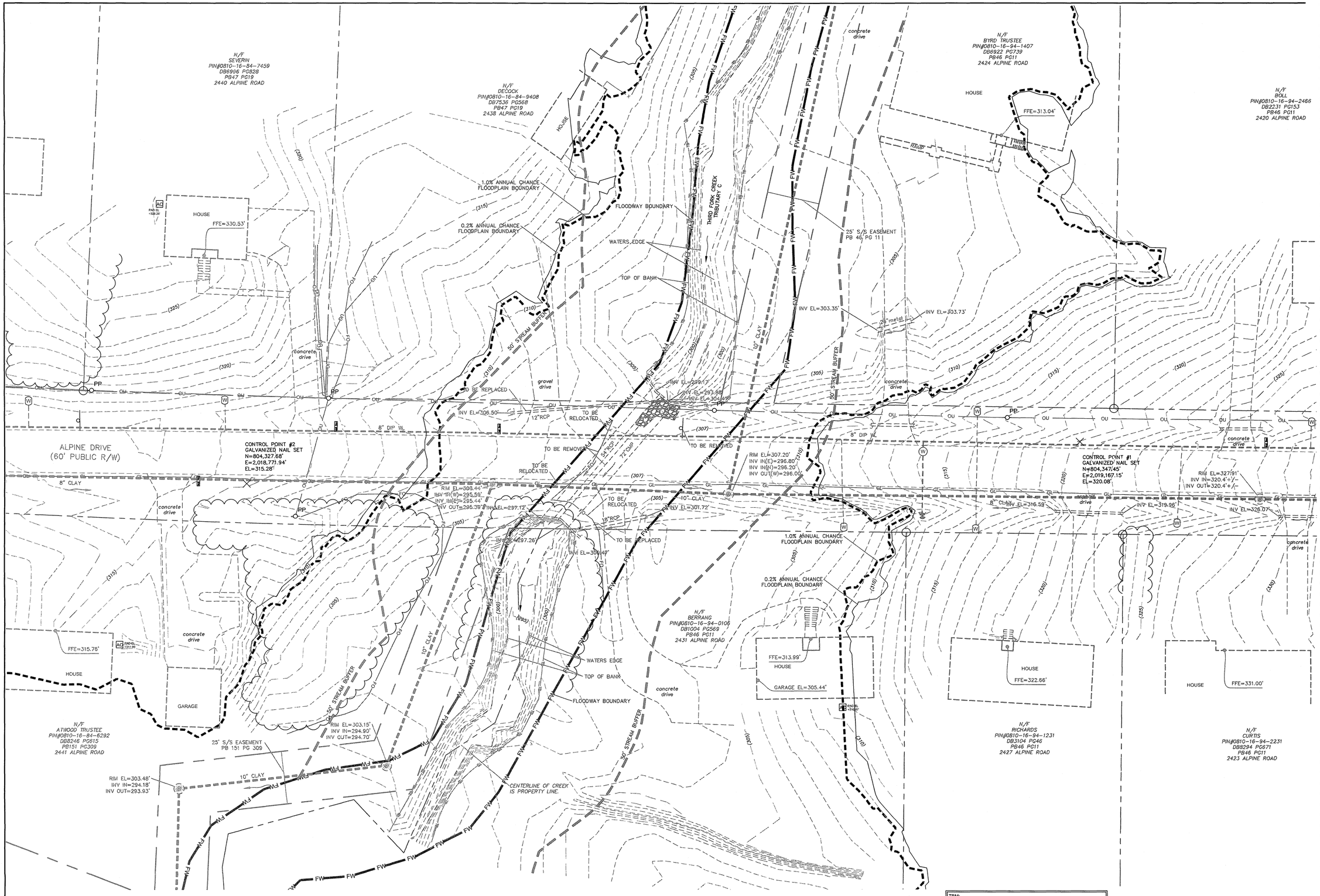


1 C001 EXISTING CONDITIONS
SCALE: 1"=20'

0 10 20 40
SCALE: 1" = 20'

N

TBM:
CONTROL POINT#1
GALVANIZED NAIL SET 3' OFF PAVEMENT NEAR SOUTHEAST PROPERTY CORNER OF 2424 ALPINE ROAD.
N=804,347.45'
E=2,019,167.15'
EL=320.08'

CONTROL POINT#2
GALVANIZED NAIL SET 4' OFF PAVEMENT, 30' EAST OF 2441 ALPINE ROAD.
N=804,327.68'
E=2,018,771.94'
EL=315.28'

811 Know what's below. Call before you dig.

CITY OF DURHAM
PUBLIC WORKS DEPARTMENT
APPROVED

ENGINEERING _____ DATE _____
STORM WATER _____ DATE _____
TRANSPORTATION _____ DATE _____
_____ DATE _____

©COPYRIGHT 2017 THIS DOCUMENT AND THE DESIGN ARE THE PROPERTY OF HORVATH ASSOCIATES, P.A. ANY REPRODUCTION WITHOUT PRIOR WRITTEN CONSENT IS PROHIBITED

HORVATH ASSOCIATES
CIVIL ENGINEERING LANDSCAPE ARCHITECTURE LAND PLANNING STORMWATER MANAGEMENT
16 CONSULTANT PLACE, SUITE 201
DURHAM, NORTH CAROLINA 27707
P 919.490.4990 F 919.490.8953
NORTH CAROLINA BOARD OF EXAMINERS FOR ENGINEERS AND SURVEYORS LICENSE NO.: C-0676
www.horvathassociates.com

# ALPINE ROAD CULVERT REPLACEMENT (SD-2018-02)

ALPINE ROAD
DURHAM, NORTH CAROLINA

## EXISTING CONDITION

NORTH CAROLINA PROFESSIONAL ENGINEER SEAL 39170 MATTHEW L. JONES
11-19-2018

| | | | |
|---|---|---|---|
| 1 | 8/3/2018 COD 1ST REVIEW COMMENTS | MJ | |

DRAWN BY: MLJ
CHECKED BY: RLM
DATE: 3/21/2018
SCALE: AS NOTED
PROJECT NO.: 1809
SHEET NO.: C001

<CONSTRUCTION DRAWINGS>

DRIVEWAY NOTE:
CONTRACTOR SHALL BE RESPONSIBLE FOR PROVIDING TEMPORARY DRIVEWAY ACCESS FOR 2431 AND 2438 ALPINE ROAD THROUGHOUT ENTIRETY OF CONSTRUCTION. THIS MAY INCLUDE STREET PARKING, TEMPORARY DRIVEWAY PADS, TEMPORARY ACCESS PATHS, AND OTHER MEASURES AS NECESSARY. CONTRACT SHALL COORDINATE ALL WORK WITH PROPERTY OWNERS.

CONTRACTOR SHALL BE RESPONSIBLE FOR ENSURING ALL OSHA REGULATIONS ARE FOLLOWED, INCLUDING REGULATIONS APPLICABLE TO WORKING IN PROXIMITY TO POWER LINES.

PROVIDE WATER-TIGHT FRAME AND COVER ON DH MH2 AND MH3.

ABANDON EXISTING 10" CLAY PIPE. REMOVE PIPE AS NECESSARY FOR CULVERT PLACEMENT. FILL ANY REMAINING VCP WITH FLOWABLE FILL. PLUG OPENING LEFT IN WALL WITH HYDRAULIC CEMENT.

CENTERLINE OF CREEK IS PROPERTY LINE.

TBM:
CONTROL POINT#1
GALVANIZED NAIL SET 3' OFF PAVEMENT NEAR SOUTHEAST PROPERTY CORNER OF 2424 ALPINE ROAD.
N=804,347.45'
E=2,019,167.15'
EL=320.08'

CONTROL POINT#2
GALVANIZED NAIL SET 4' OFF PAVEMENT, 30' EAST OF 2441 ALPINE ROAD.
N=804,327.68'
E=2,018,771.94'
EL=315.28'

1 C300 PROPOSED CONDITIONS PLAN VIEW
1"=20'

SCALE: 1" = 20'

811 Know what's below. Call before you dig.

CITY OF DURHAM
PUBLIC WORKS DEPARTMENT
APPROVED
ENGINEERING _____ DATE _____
STORM WATER _____ DATE _____
TRANSPORTATION _____ DATE _____
_____ DATE _____
_____ DATE _____

©COPYRIGHT 2017 THIS DOCUMENT AND THE DESIGN ARE THE PROPERTY OF HORVATH ASSOCIATES, P.A. ANY REPRODUCTION WITHOUT PRIOR WRITTEN CONSENT IS PROHIBITED

HORVATH ASSOCIATES
CIVIL ENGINEERING LAND PLANNING
LANDSCAPE ARCHITECTURE STORMWATER MANAGEMENT
16 CONSULTANT PLACE, SUITE 201
DURHAM, NORTH CAROLINA 27707
P 919.490.4990 F 919.490.8953
NORTH CAROLINA BOARD OF EXAMINERS FOR ENGINEERS AND SURVEYORS LICENSE NO.: C-0676
www.horvathassociates.com

# ALPINE ROAD CULVERT REPLACEMENT (SD-2018-02)

ALPINE ROAD
DURHAM, NORTH CAROLINA

PROPOSED CONDITIONS OVERALL PLAN VIEW

NORTH CAROLINA PROFESSIONAL ENGINEER SEAL 39170 MATTHEW L. JONES
11-19-2018

| | | |
|---|---|---|
| 1 | 8/3/2018 COD 1ST REVIEW COMMENTS | MJ |

DRAWN BY: MLJ
CHECKED BY: RLM
DATE: 3/21/2018
SCALE: AS NOTED
PROJECT NO.: 1809
SHEET NO.: C300

<CONSTRUCTION DRAWINGS>

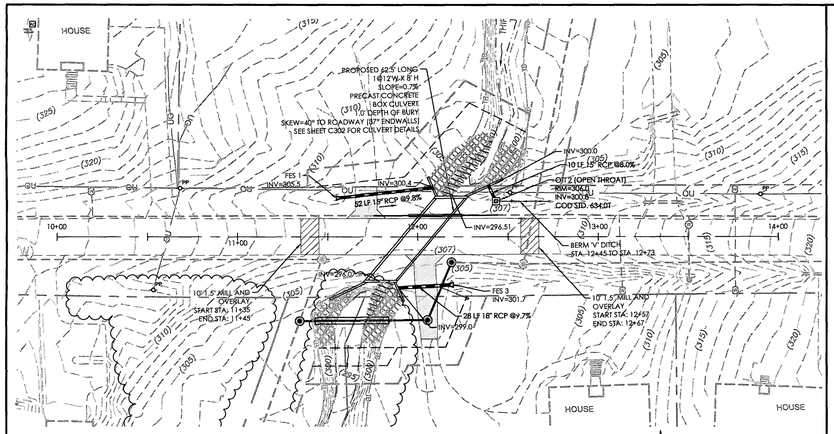


1 C301 ALPINE ROAD PLAN VIEW
1"=40'

SCALE: 1" = 40'

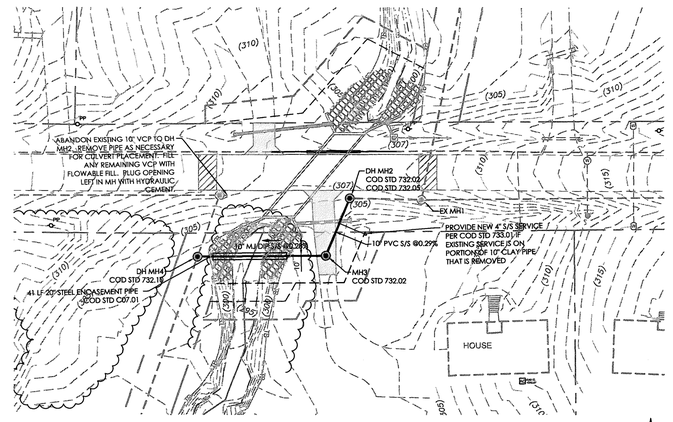


3 C301 SANITARY SEWER PLAN VIEW
1"=40'

SCALE: 1" = 40'

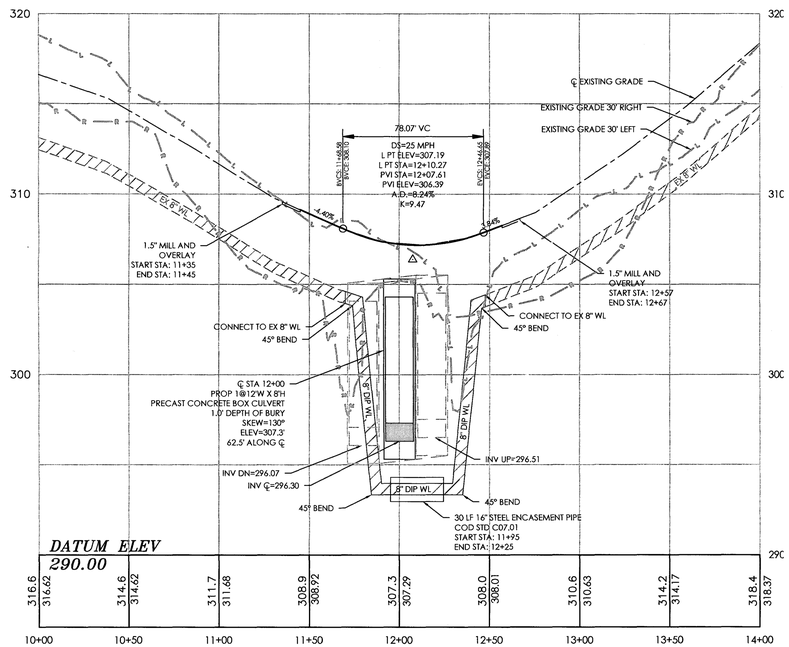


2 C301 ALPINE ROAD PROFILE VIEW
1"=40':H 4':V

SCALE: 1" = 40':H 4':V

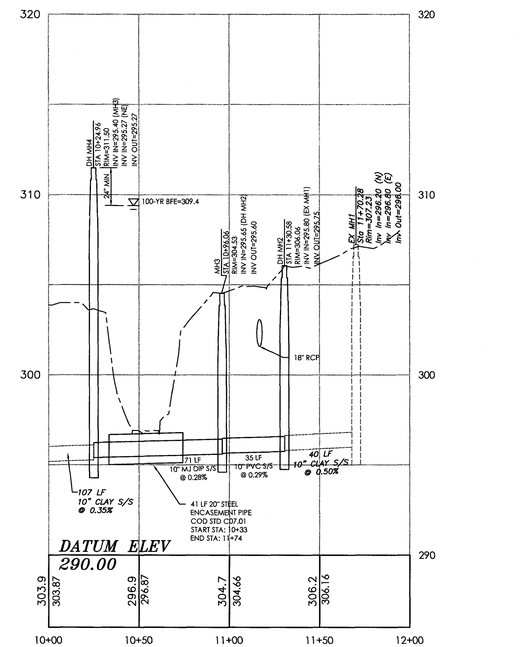


4 C301 SANITARY SEWER PROFILE VIEW
1"=40':H 4':V

SCALE: 1" = 40':H 4':V

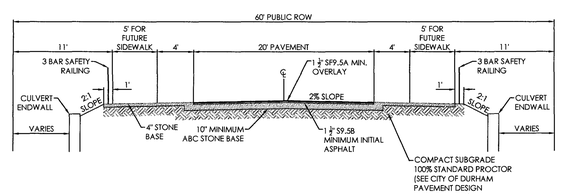


5 C301 ALPINE ROAD TYPICAL SECTION
N.T.S.

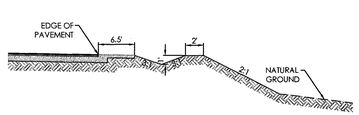


STA. 12+45 TO STA. 12+73

6 C301 BERM 'V' DITCH
N.T.S.

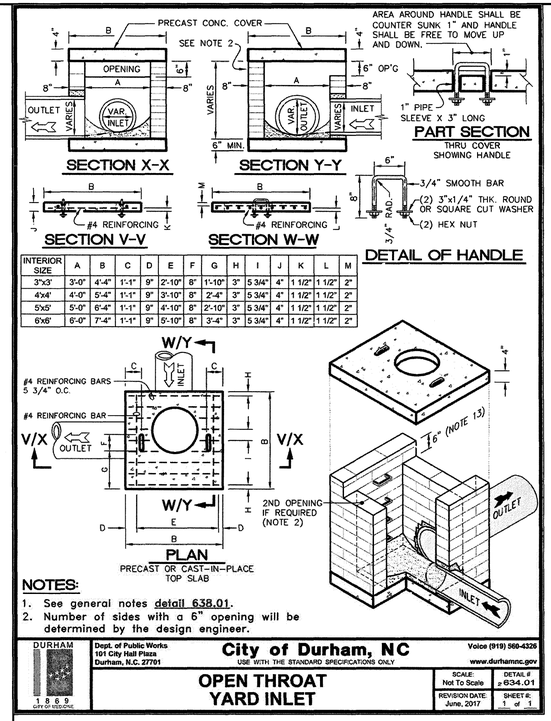


| INTERIOR SIZE | A | B | C | D | E | F | G | H | I | J | K | L | M |
|---|---|---|---|---|---|---|---|---|---|---|---|---|---|
| 3'x3' | 3'-0" | 4'-4" | 1'-1" | 9" | 2'-10" | 8" | 1'-10" | 3" | 5 3/4" | 4" | 1 1/2" | 1 1/2" | 2" |
| 4'x4' | 4'-0" | 5'-4" | 1'-1" | 9" | 3'-10" | 8" | 2'-4" | 3" | 5 3/4" | 4" | 1 1/2" | 1 1/2" | 2" |
| 5'x5' | 5'-0" | 6'-4" | 1'-1" | 9" | 4'-10" | 8" | 2'-10" | 3" | 5 3/4" | 4" | 1 1/2" | 1 1/2" | 2" |
| 6'x6' | 6'-0" | 7'-4" | 1'-1" | 9" | 5'-10" | 8" | 3'-4" | 3" | 5 3/4" | 4" | 1 1/2" | 1 1/2" | 2" |

**NOTES:**

1. See general notes detail 638.01.
2. Number of sides with a 6" opening will be determined by the design engineer.

DURHAM 1869 CITY OF MEDICINE

Dept. of Public Works
101 City Hall Plaza
Durham, N.C. 27701

**City of Durham, NC**
USE WITH THE STANDARD SPECIFICATIONS ONLY

Voice (919) 560-4326
www.durhamnc.gov

**OPEN THROAT YARD INLET**

SCALE: Not To Scale
DETAIL #: 634.01
REVISION DATE: June, 2017
SHEET #: 1 of 1

Know what's below. Call before you dig. 811

CITY OF DURHAM
PUBLIC WORKS DEPARTMENT
APPROVED
ENGINEERING _____ DATE 12/21/18
STORM WATER _____ DATE _____
TRANSPORTATION _____ DATE _____
_____ DATE _____
_____ DATE _____

©COPYRIGHT 2017 THIS DOCUMENT AND THE DESIGN ARE THE PROPERTY OF HORVATH ASSOCIATES, P.A. ANY REPRODUCTION WITHOUT PRIOR WRITTEN CONSENT IS PROHIBITED

HORVATH ASSOCIATES
CIVIL ENGINEERING LAND PLANNING
LANDSCAPE ARCHITECTURE STORMWATER MANAGEMENT
16 CONSULTANT PLACE, SUITE 201
DURHAM, NORTH CAROLINA 27707
P 919.490.4990 F 919.490.8953
NORTH CAROLINA BOARD OF EXAMINERS FOR ENGINEERS AND SURVEYORS LICENSE NO.: C-0676
www.horvathassociates.com

# ALPINE ROAD CULVERT REPLACEMENT (SD-2018-02)

ALPINE ROAD
DURHAM, NORTH CAROLINA

PLAN AND PROFILES

NORTH CAROLINA PROFESSIONAL ENGINEER SEAL 39170 11-19-2018 MATTHEW L. JONES

| | | |
|---|---|---|
| 1 | 8/3/2018 COD 1ST REVIEW COMMENTS | MJ |

DRAWN BY: MLJ
CHECKED BY: RLM
DATE: 3/21/2018
SCALE: AS NOTED
PROJECT NO.: 1809
SHEET NO.: C301

<CONSTRUCTION DRAWINGS>

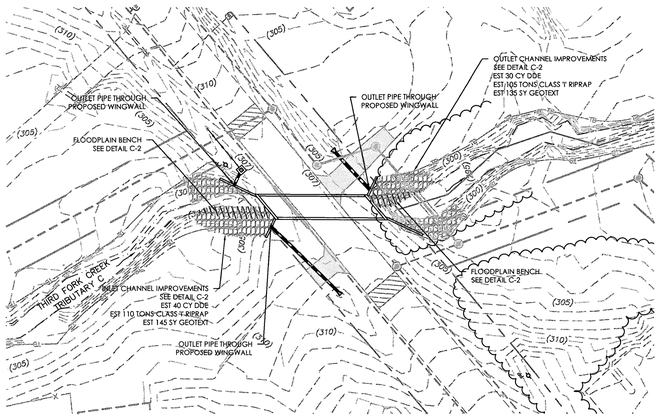


1 C302 CULVERT PLAN VIEW

1"=40'

0 20 40 80

SCALE: 1" = 40'

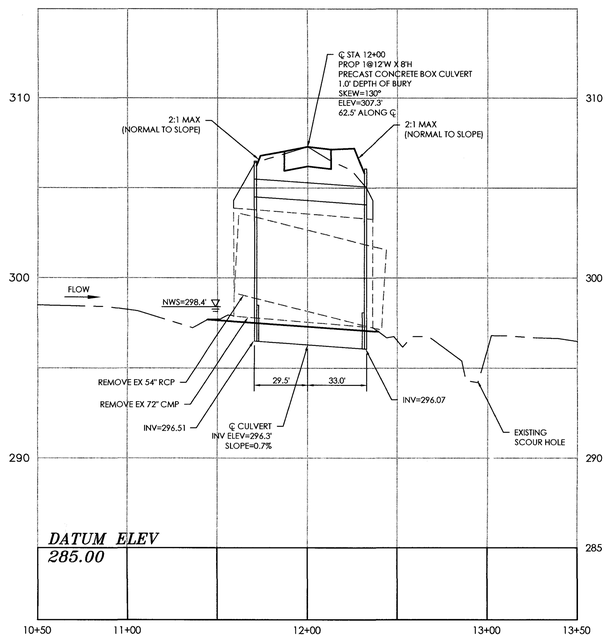


2 C302 CUVLERT PROFILE VIEW

1"=40':H 4':V

0 20:H 2:V 40:H 4:V 80:H 8:V

SCALE: 1" = 40':H 4':V

## DETAIL C-1

(NOT TO SCALE)

SINGLE BARREL CULVERT
SKEWED LOW FLOW
CHANNEL AND SILLS

*NOTES:

1. NATIVE MATERIAL BETWEEN SILLS/BAFFLES IN THE CULVERT SHALL PROVIDE A CONTINUOUS LOW FLOW CHANNEL. NATIVE MATERIAL CONSISTS OF MATERIAL THAT IS EXCAVATED FROM THE STREAM BED AT THE PROJECT SITE DURING CONSTRUCTION. NATIVE MATERIAL IS SUBJECT TO APPROVAL BY THE ENGINEER AND MAY BE SUBJECT TO PERMIT CONDITIONS.
2. SILLS/BAFFLES ARE TO BE 1.0 FT. WIDE, CAST SEPARATELY AND ATTACHED BY DOWELS OR CAST INTEGRALLY TO PRECAST CULVERT SEGMENTS IN FACTORY.
3. TOP OF LOW FLOW SILLS/BAFFLES SHOULD MATCH STREAM BED ELEVATION IN LOW FLOW CHANNEL OF STREAM. (THALWEG)
4. DO NOT SET ELEVATION OF HIGH SILL/BAFFLES ABOVE BANK FULL.
5. NUMBER OF SILL/BAFFLES DETERMINED BY THE ENGINEER.

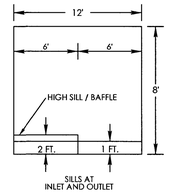


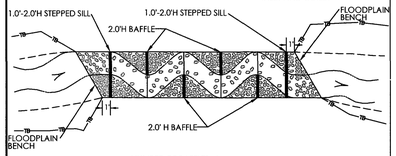


NUMBER OF BAFFLES=4
ON 10'-6" FT CENTERS FROM DOWNSTREAM SILL

PLAN VIEW
NOT TO SCALE

## DETAIL C-2: CHANNEL IMPROVEMENTS

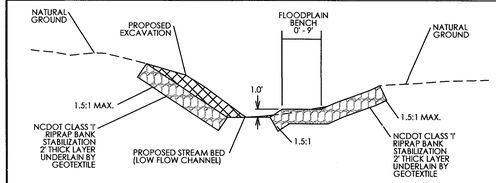


INLET CHANNEL IMPROVEMENTS
(LOOKING DOWNSTREAM)

NOT TO SCALE

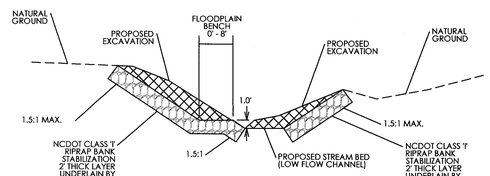


OUTLET CHANNEL IMPROVEMENTS
(LOOKING DOWNSTREAM)

NOT TO SCALE

HORVATH ASSOCIATES
CIVIL ENGINEERING LAND PLANNING
LANDSCAPE ARCHITECTURE STORMWATER MANAGEMENT
16 CONSULTANT PLACE, SUITE 201
DURHAM, NORTH CAROLINA 27707
P 919.490.4990 F 919.490.8953
NORTH CAROLINA BOARD OF EXAMINERS FOR ENGINEERS AND SURVEYORS LICENSE NO.: C-0676
www.horvathassociates.com

# ALPINE ROAD CULVERT REPLACEMENT (SD-2018-02)

ALPINE ROAD
DURHAM, NORTH CAROLINA

## CULVERT DETAILS

SEAL 39170 11-19-2018 ENGINEER MATTHEW L. JONES NORTH CAROLINA PROFESSIONAL ENGINEER

| | | |
|---|---|---|
| 1 | 8/3/2018 COD 1ST REVIEW COMMENTS | MJ |

DRAWN BY: MLJ
CHECKED BY: RLM
DATE: 3/21/2018
SCALE: AS NOTED
PROJECT NO.: 1809
SHEET NO.: C302

<CONSTRUCTION DRAWINGS>

Know what's below. Call before you dig.

CITY OF DURHAM
PUBLIC WORKS DEPARTMENT
APPROVED
ENGINEERING _____ DATE 12/21/18
STORM WATER _____ DATE _____
TRANSPORTATION _____ DATE _____
_____ DATE _____
_____ DATE _____

©COPYRIGHT 2017 THIS DOCUMENT AND THE DESIGN ARE THE PROPERTY OF HORVATH ASSOCIATES, P.A. ANY REPRODUCTION WITHOUT PRIOR WRITTEN CONSENT IS PROHIBITED

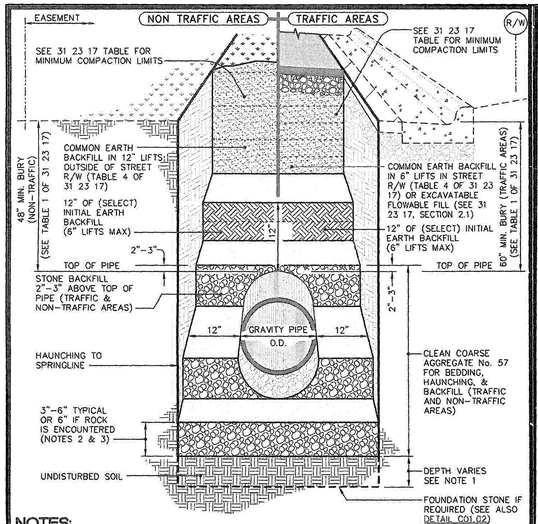


**NOTES:**

1. Foundation stone shall be required when soil conditions are unsuitable.
2. An additional 1 inch depth of bedding material will be required for each additional 2 feet of trench depth in excess of 16 feet up to a maximum of 12 inches.
3. See specifications 31 23 17 section 3.12 bedding requirements as bedding depth relates to pipe material.
4. See Detail C01.01 where trench rock is encountered for required clearances. Increase depth at bottom relates to bury. (Note 2 above)

DURHAM 1869 CITY OF MEDICINE | Dept. of Water Management, 1600 Mist Lake Dr., Durham, N.C. 27704 | **City of Durham, NC** USE WITH THE STANDARD SPECIFICATIONS ONLY | Voice (919) 560-4381 www.durhamnc.gov

**SANITARY SEWER LINE TRENCH (TRAFFIC AND NON-TRAFFIC AREAS)**

SCALE: Not To Scale | DETAIL # 731.01 | REVISION DATE: Feb., 2017 | SHEET # 1 of 1

## STREET APPLICATION

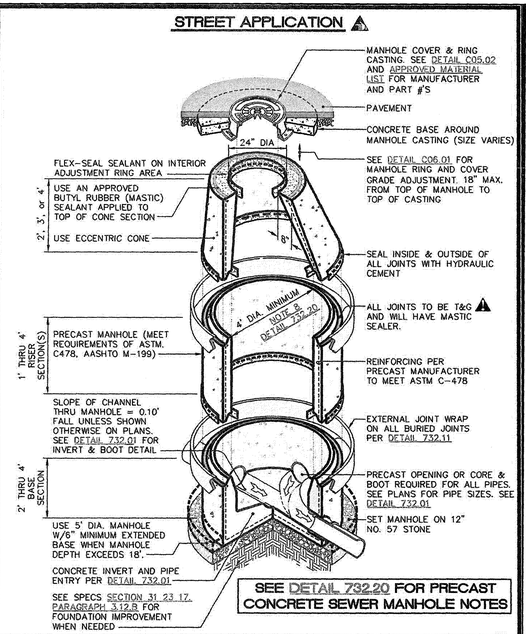


**SEE DETAIL 732.20 FOR PRECAST CONCRETE SEWER MANHOLE NOTES**

DURHAM 1869 CITY OF MEDICINE | Dept. of Water Management, 1600 Mist Lake Dr., Durham, N.C. 27704 | **City of Durham, NC** USE WITH THE STANDARD SPECIFICATIONS ONLY | Voice (919) 560-4381 www.durhamnc.gov

**STANDARD ECCENTRIC CONE PRECAST MANHOLE DETAIL**

SCALE: Not To Scale | DETAIL # 732.02 | REVISION DATE: Feb., 2017 | SHEET # 1 of 2

## FIELD and WOODS APPLICATION

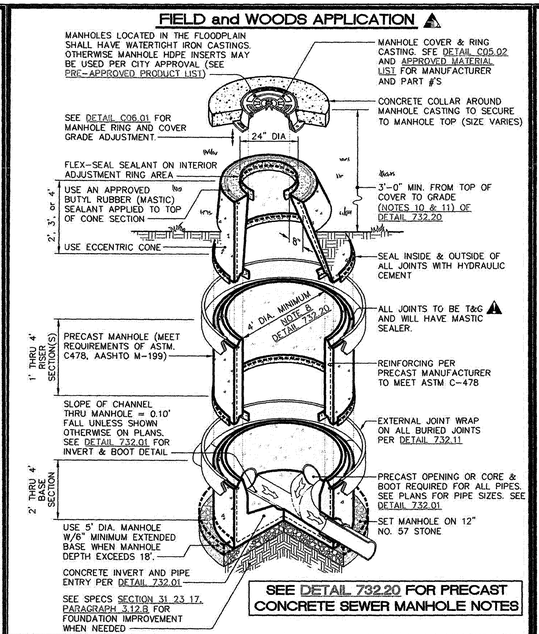


**SEE DETAIL 732.20 FOR PRECAST CONCRETE SEWER MANHOLE NOTES**

DURHAM 1869 CITY OF MEDICINE | Dept. of Water Management, 1600 Mist Lake Dr., Durham, N.C. 27704 | **City of Durham, NC** USE WITH THE STANDARD SPECIFICATIONS ONLY | Voice (919) 560-4381 www.durhamnc.gov

**STANDARD ECCENTRIC CONE PRECAST MANHOLE DETAIL**

SCALE: Not To Scale | DETAIL # 732.02 | REVISION DATE: Feb., 2017 | SHEET # 2 of 2

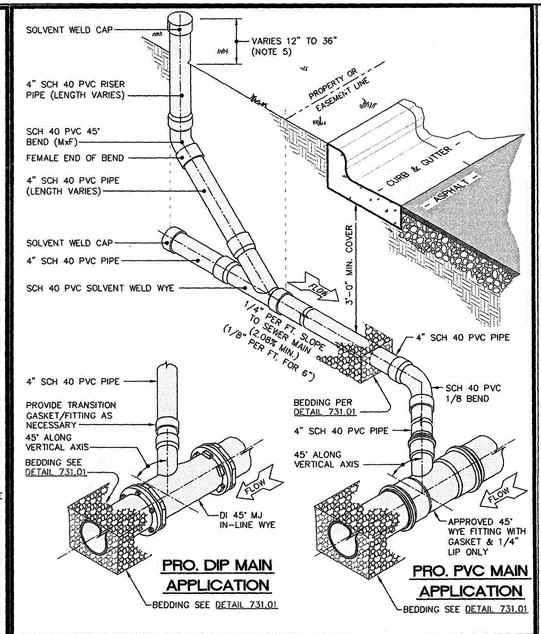


**PRO. DIP MAIN APPLICATION**

BEDDING SEE DETAIL 731.01

**PRO. PVC MAIN APPLICATION**

BEDDING SEE DETAIL 731.01

DURHAM 1869 CITY OF MEDICINE | Dept. of Water Management, 1600 Mist Lake Dr., Durham, N.C. 27704 | **City of Durham, NC** USE WITH THE STANDARD SPECIFICATIONS ONLY | Voice (919) 560-4381 www.durhamnc.gov

**STANDARD SEWER MAIN LATERAL STUB OUT**

SCALE: Not To Scale | DETAIL # 733.01 | REVISION DATE: Feb., 2017 | SHEET # 1 of 2

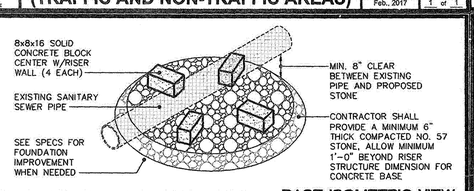


**BASE ISOMETRIC VIEW**

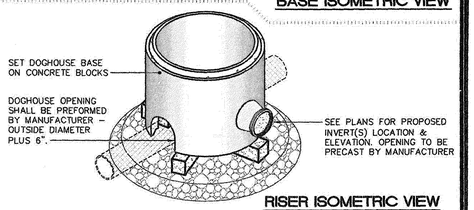


**RISER ISOMETRIC VIEW**

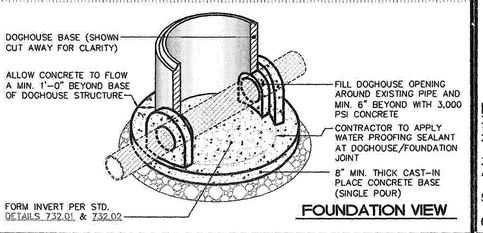


**FOUNDATION VIEW**

DURHAM 1869 CITY OF MEDICINE | Dept. of Water Management, 1600 Mist Lake Dr., Durham, N.C. 27704 | **City of Durham, NC** USE WITH THE STANDARD SPECIFICATIONS ONLY | Voice (919) 560-4381 www.durhamnc.gov

**DOGHOUSE MANHOLE INSTALLATION OVER EXISTING SEWER MAIN**

SCALE: Not To Scale | DETAIL # 732.05 | REVISION DATE: Feb., 2017 | SHEET # 1 of 2

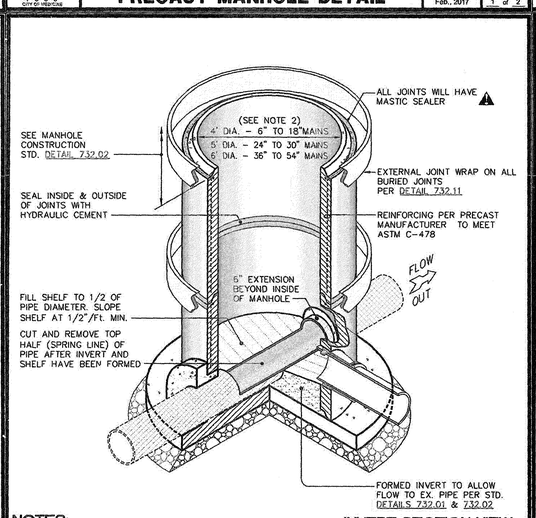


**INVERT SECTION VIEW**

**NOTES:**

1. All service laterals into manhole to be core drilled and booted.
2. Maximum depth 4' dia. manhole = 18' (See specifications). Use a minimum 5' dia. manhole for depth greater than 18'.
3. Flow of existing main shall be maintained during construction.
4. This detail to be used when an 8" main necessitates construction of a new manhole.
5. For vitrified clay pipe, concrete shall be poured to next existing joint (both sides of manhole).
6. Concrete to be a minimum of 4,000 PSI.

DURHAM 1869 CITY OF MEDICINE | Dept. of Water Management, 1600 Mist Lake Dr., Durham, N.C. 27704 | **City of Durham, NC** USE WITH THE STANDARD SPECIFICATIONS ONLY | Voice (919) 560-4381 www.durhamnc.gov

**DOGHOUSE MANHOLE INSTALLATION OVER EXISTING SEWER MAIN**

SCALE: Not To Scale | DETAIL # 732.05 | REVISION DATE: Feb., 2017 | SHEET # 2 of 2

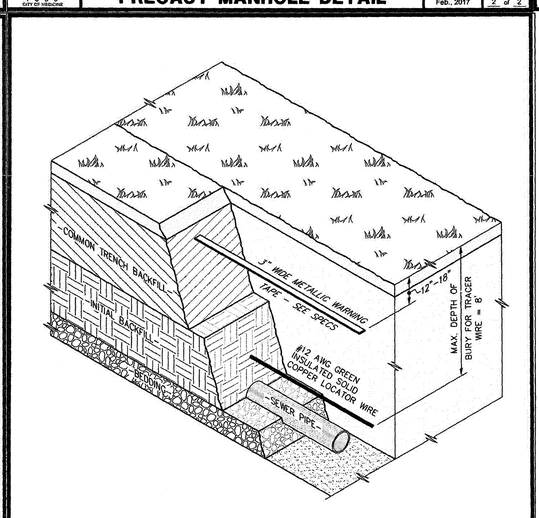


**NOTES:**

1. The tracer wire shall be continuous to the greatest extent possible. For gravity main installations less than 8 feet in depth, the tracer wire shall be laid flat and securely affixed to the top of the pipe with zip ties at 10-foot intervals . For pipe installations deeper than 8 feet, the tracer shall be installed at a depth of 7 to 8 feet. The tracer wire shall be protected from damage during the execution of the work. No breaks or cuts in the tracer wire shall be permitted.

DURHAM 1869 CITY OF MEDICINE | Dept. of Water Management, 1600 Mist Lake Dr., Durham, N.C. 27704 | **City of Durham, NC** USE WITH THE STANDARD SPECIFICATIONS ONLY | Voice (919) 560-4381 www.durhamnc.gov

**TRACER WIRE PLACEMENT WHEN BURY (TO TOP OF PIPE) EXCEEDS 8 FEET**

SCALE: Not To Scale | DETAIL # 732.13 | REVISION DATE: Feb., 2017 | SHEET # 1 of 1

811 Know what's below. Call before you dig.

CITY OF DURHAM
PUBLIC WORKS DEPARTMENT
APPROVED

ENGINEERING _____ DATE _____
STORM WATER _____ DATE _____
TRANSPORTATION _____ DATE _____
_____ DATE _____
_____ DATE _____

HORVATH ASSOCIATES
CIVIL ENGINEERING LAND PLANNING
LANDSCAPE ARCHITECTURE STORMWATER MANAGEMENT
16 CONSULTANT PLACE, SUITE 201
DURHAM, NORTH CAROLINA 27707
P 919.490.4990 F 919.490.8953
NORTH CAROLINA BOARD OF EXAMINERS FOR ENGINEERS AND SURVEYORS LICENSE NO.: C-0676
www.horvathassociates.com

# ALPINE ROAD CULVERT REPLACEMENT (SD-2018-02)

ALPINE ROAD
DURHAM, NORTH CAROLINA

UTILITY DETAILS

NORTH CAROLINA PROFESSIONAL ENGINEER SEAL 39170 11-19-2018 MATTHEW L. JONES

| | | |
|---|---|---|
| 1 | 8/3/2018 COD 1ST REVIEW COMMENTS | MJ |

DRAWN BY: MLJ | CHECKED BY: RLM
DATE: 3/21/2018
SCALE: AS NOTED
PROJECT NO.: 1809
SHEET NO.: C303

<CONSTRUCTION DRAWINGS>

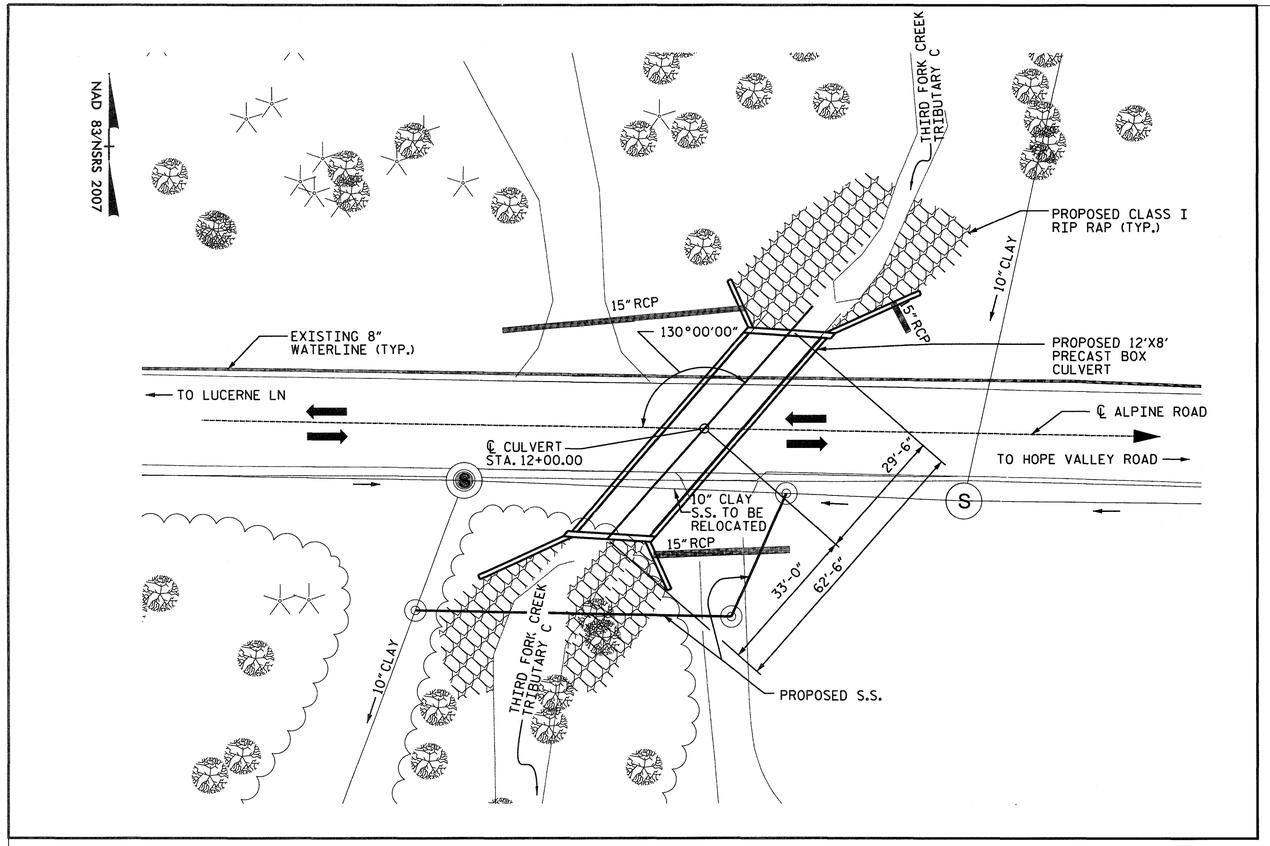


## LOCATION SKETCH

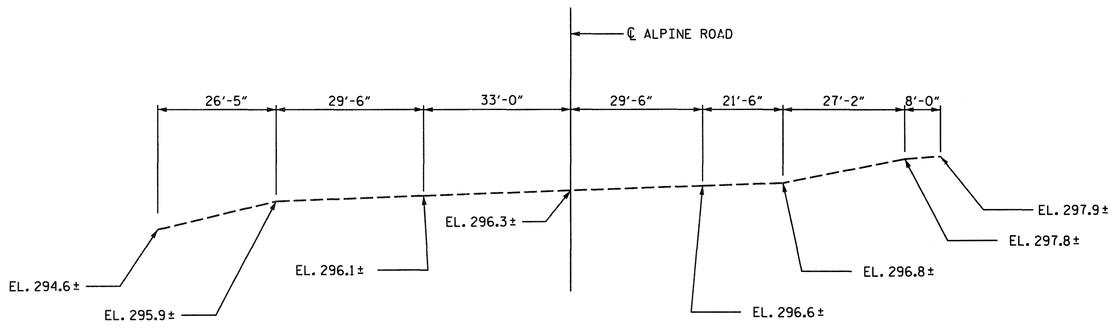


## PROFILE ALONG ℄ CULVERT

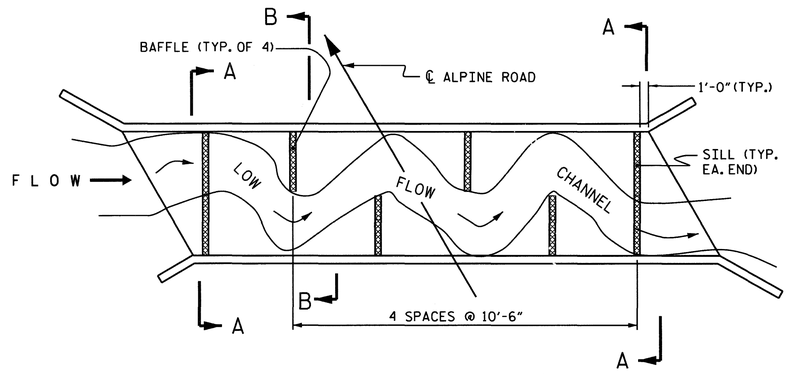


## PLAN OF SILLS/BAFFLES

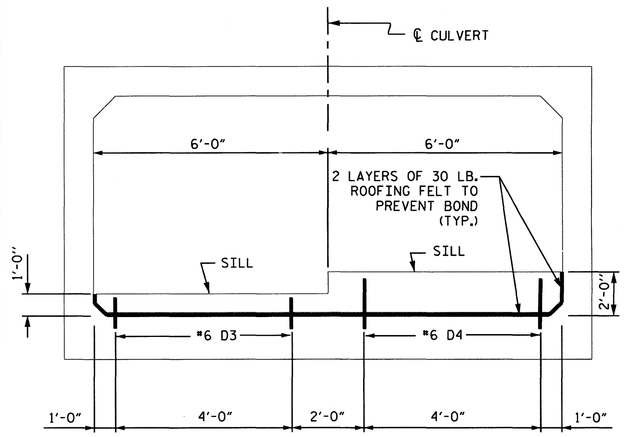


## SECTION A-A

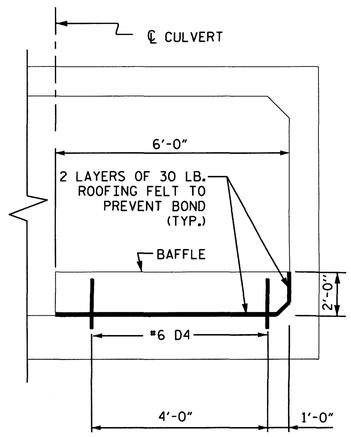


## SECTION B-B

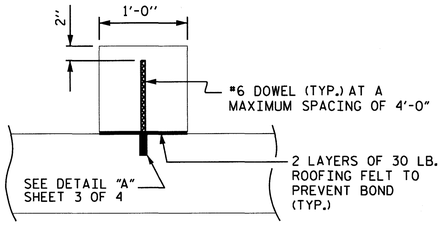


## SECTION THROUGH SILL/BAFFLE

## CULVERT SILL/BAFFLE DETAILS

NATIVE MATERIAL BETWEEN SILLS/BAFFLES IN CULVERT SHALL PROVIDE A CONTINUOUS LOW FLOW CHNNEL. NATIVE MATERIAL CONSISTS OF MATERIAL THAT IS EXCAVATED FROM THE STREAM BED AT THE PROJECT SITE DURING CONSTRUCTION. NATIVE MATERIAL IS SUBJECT TO APPROVAL BY THE ENGINEER AND MAY BE SUBJECT TO PERMIT CONDITIONS.

| HYDRAULIC DATA | | |
|---|---|---|
| DESIGN DISCHARGE | = 500 | CFS |
| DESIGN FREQUENCY | = 25 | YRS |
| DESIGN HW ELEVATION | = 304.8 | FT |
| DRAINAGE AREA | = 0.36 | SQ.MI. |
| BASE DISCHARGE | = 1125 | CFS |
| BASE FREQUENCY | = 100 | YRS |
| BASE HW ELEVATION | = 309.4 | FT |

| OVERTOPPING FLOOD DATA | | |
|---|---|---|
| OVERTOPPING DISCHARGE | = 650 | CFS |
| OVERTOPPING FREQUENCY | = 100 | YRS |
| OVERTOPPING ELEVATION | = 307.1 | FT |

CITY OF DURHAM
PUBLIC WORKS DEPARTMENT
APPROVED

ENGINEERING _____ DATE _____
STORM WATER _____ DATE _____
TRANSPORTATION _____ DATE _____
_____ DATE _____
_____ DATE _____

KCI JOB NO. 171802061

©COPYRIGHT 2017 THIS DOCUMENT AND THE DESIGN ARE THE PROPERTY OF HORVATH ASSOCIATES, P.A. ANY REPRODUCTION WITHOUT PRIOR WRITTEN CONSENT IS PROHIBITED

KCI Associates of North Carolina, P.A.
ENGINEERS • PLANNERS • ECOLOGISTS LICENSE NUMBER: C-0764
SUITE 220, LANDMARK CENTER II • 4601 SIX FORKS RD. RALEIGH, N.C. 27609-5320 (919) 783-9214

# ALPINE ROAD CULVERT REPLACEMENT (SD-2018-02)

ALPINE ROAD
DURHAM, NORTH CAROLINA

# CULVERT STRUCTURAL DRAWINGS

## GENERAL PLAN

Robert C. Larson

NORTH CAROLINA PROFESSIONAL SEAL 14114 ENGINEER ROBERT C. LARSON

11/15/18

| DRAWN BY: | CHECKED BY: |
|---|---|
| RJF | RCL |

DATE 6/30/2018
SCALE AS NOTED
PROJECT NO. 1809
SHEET NO. S1 of 4

<CONSTRUCTION DRAWINGS>

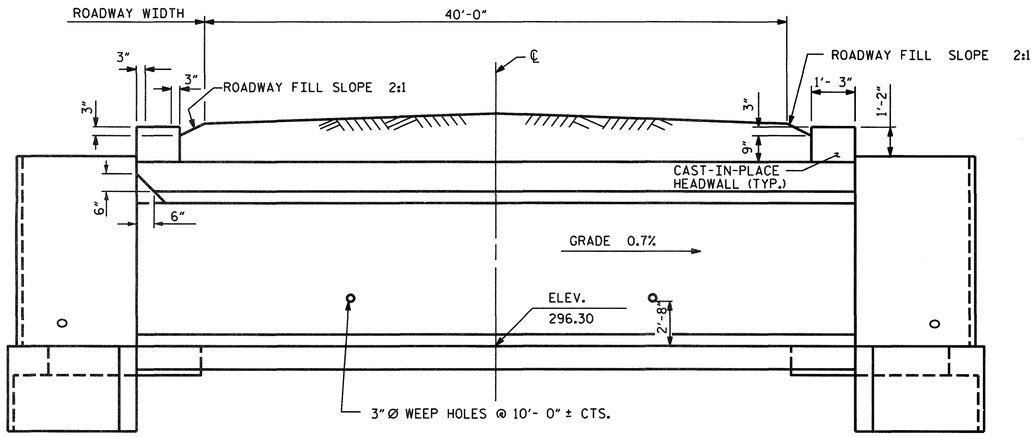


## CULVERT SECTION NORMAL TO ROADWAY

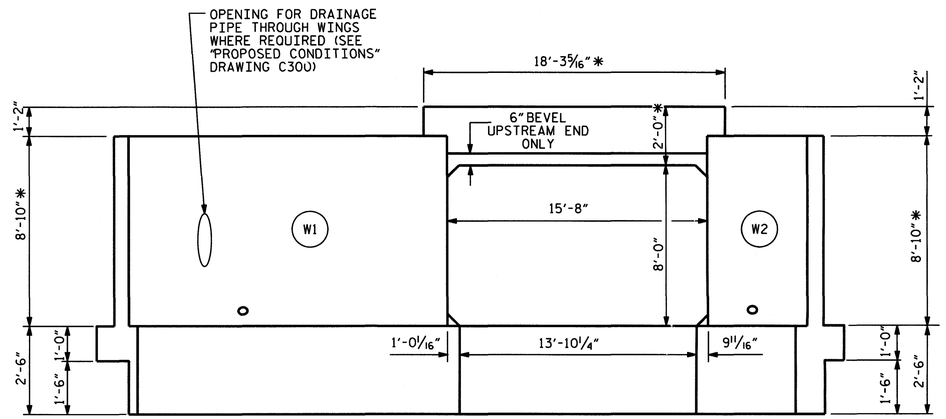


## END ELEVATION NORMAL TO SKEW

*DIMENSIONS BASED ON ASSUMED 1'-0" WALL/ROOF THICKNESS. ADJUST AS REQUIRED.

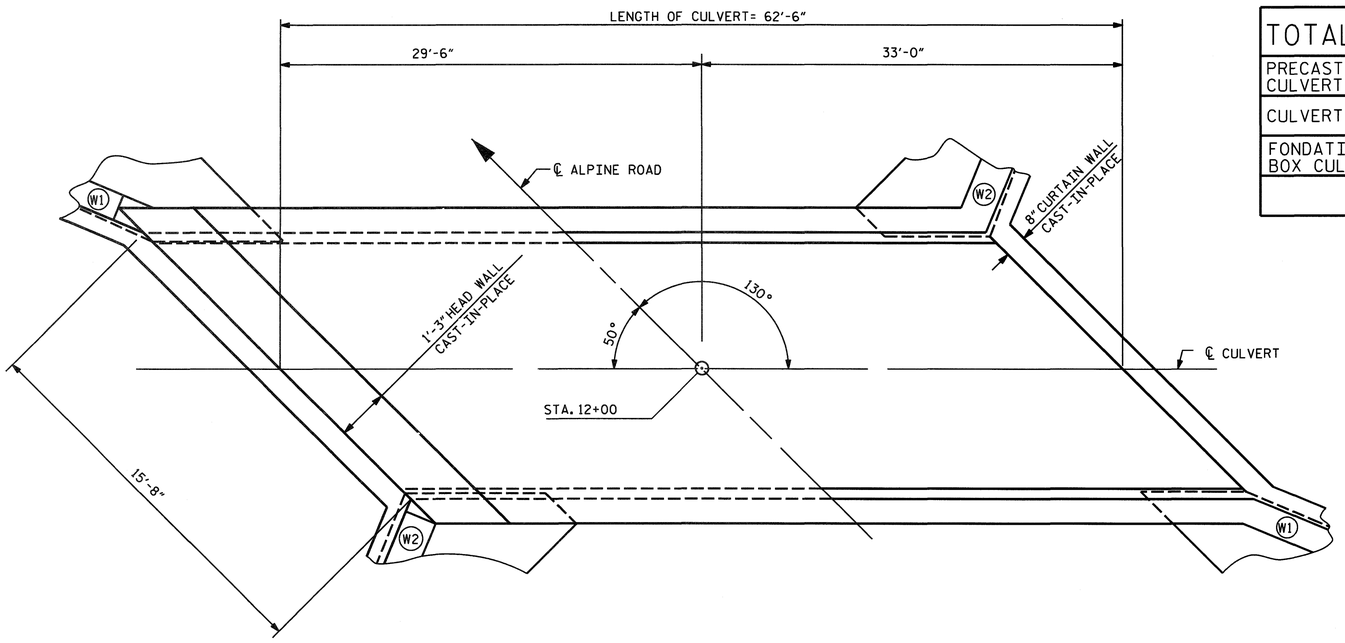


## PART PLAN - ROOF SLAB

## PART PLAN - FLOOR SLAB

| TOTAL BILL OF MATERIAL |
|---|
| PRECAST REINFORCED CONCRETE BOX CULVERT @ STA. 12+00 ....LUMP SUM |
| CULVERT EXCAVATION.....LUMP SUM |
| FONDATION CONDITIONING MATERIAL BOX CULVERT ..... TONS_____ |
| |

| BAR SCHEDULE | | | | | |
|---|---|---|---|---|---|
| BAR | NO. | SIZE | TYPE | LENGTH | WEIGHT |
| D1 | 36 | 6 | 1 | 1'-8" | 90 |
| D2 | 36 | 4 | STR | 3'-4" | 80 |
| D3 | 4 | 6 | 2 | 1'-0" | 6 |
| D4 | 12 | 6 | 2 | 2'-0" | 36 |
| | | | | | |
| G1 | 4 | 5 | STR | 17'-8" | 74 |
| | | | | | |
| S2 | 6 | 8 | STR | 17'-8" | 283 |
| | | | | | |
| TOTAL | | | | LBS. | 569 |

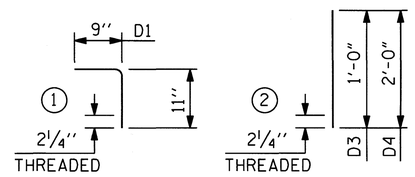


## BAR TYPES

CITY OF DURHAM
PUBLIC WORKS DEPARTMENT
APPROVED

ENGINEERING _____ DATE _____
STORM WATER _____ DATE _____
TRANSPORTATION _____ DATE _____
_____ DATE _____
_____ DATE _____

©COPYRIGHT 2017 THIS DOCUMENT AND THE DESIGN ARE THE PROPERTY OF HORVATH ASSOCIATES, P.A. ANY REPRODUCTION WITHOUT PRIOR WRITTEN CONSENT IS PROHIBITED

KCI JOB NO: 171800261

KCI Associates of North Carolina, P.A.
ENGINEERS • PLANNERS • ECOLOGISTS LICENSE NUMBER: C-0764
SUITE 220, LANDMARK CENTER II 4601 SIX FORKS RD, RALEIGH, N.C. 27609-5120 (919) 783-9214

# ALPINE ROAD CULVERT REPLACEMENT (SD-2018-02)

ALPINE ROAD
DURHAM, NORTH CAROLINA

## CULVERT STRUCTURAL DRAWINGS

## CULVERT LAYOUT

NORTH CAROLINA PROFESSIONAL SEAL 14114 ENGINEER ROBERT C. LARSON

Robert C Larson

11/15/18

DRAWN BY: RJF
CHECKED BY: RCL
DATE: 6/30/2018
SCALE: AS NOTED
PROJECT NO.: 1809
SHEET NO.: S2 of 4

<CONSTRUCTION DRAWINGS>

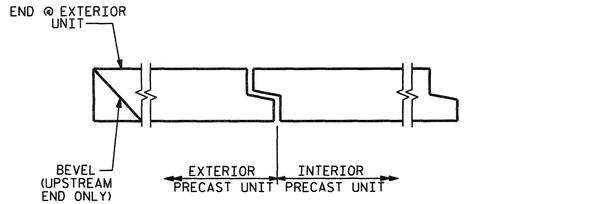


## SECTION THRU TOP SLAB

(BOTTOM SLAB JOINT SIMILAR)

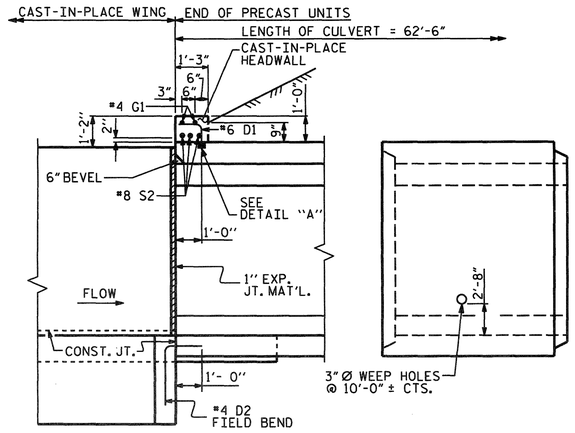


## SECTION B-B

(SHOWING INLET END UNIT)

NO END UNIT SHALL BE LESS THAN 3'-0".

## TYPICAL PRECAST UNIT

(INTERIOR UNIT SHOWN)

## ELEVATION




## DETAIL A

** STRUCTURAL CONNECTION INSERT 2 STRUT OR EQUAL; LENGTH = 4 1/2", INSERT WIDTH DIA. = 3/4". NO. REQUIRED 52

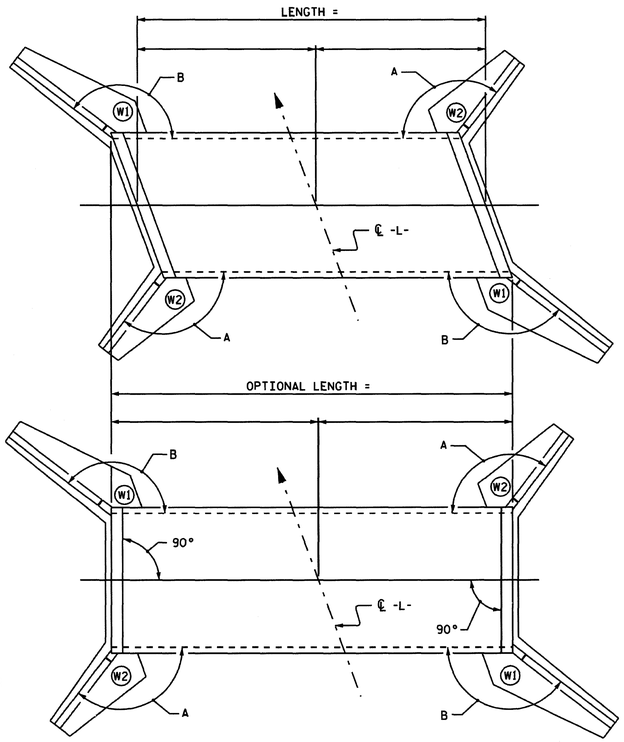


THE CONTRACTOR, AT HIS OPTION, MAY USE ENDS OF PRECAST BOX AT 90° SKEW WITH OPTIONAL LENGTH AS SHOWN. ANY ADDITIONAL COST DUE TO THE USE OF THE OPTION WILL BE PAID FOR BY THE CONTRACTOR.

ANGLES "A" AND "B" SHALL BE MAINTAINED.

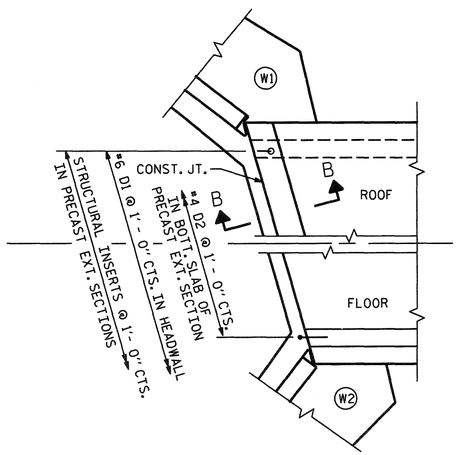


## PLAN - END UNIT

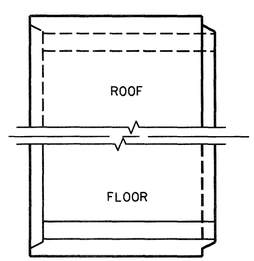


## PLAN - TYPICAL PRECAST UNIT

(INTERIOR UNIT SHOWN)

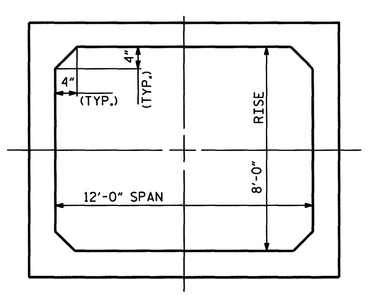


## TYPICAL SECTION

## NOTES

ASSUMED LIVE LOAD = HL 93.

FOR OTHER STANDARD DATA AND NOTES SEE SHEET S-N.

3" Ø WEEP HOLES INDICATED TO BE IN ACCORDANCE WITH THE SPECIFICATIONS.

THE RESIDENT ENGINEER SHALL CHECK THE LENGTH OF CULVERT BEFORE STAKING IT OUT TO MAKE CERTAIN THAT IT WILL PROPERLY TAKE CARE OF THE FILL.

DIMENSIONS FOR WING LAYOUT AS WELL AS ADDITIONAL REINFORCING STEEL EMBEDDED IN BARREL ARE SHOWN ON WING SHEET.

THE CONCRETE FOR THE PRECAST UNITS SHALL ATTAIN A MINIMUM COMPRESSIVE STRENGTH AT 28 DAYS OF 5000 P.S.I.. THE CONCRETE FOR THE HEADWALLS, WINGS AND END CURTAIN WALLS SHALL BE CLASS "A" CONCRETE AS PER THE STANDARD SPECIFICATIONS.

CAST-IN-PLACE CONCRETE SHALL BE POURED IN THE FOLLOWING ORDER:
1. WING FOOTINGS, AND CURTAIN WALL.
2. HEADWALLS, WING WALLS.

ALL PRECAST UNITS SHALL BE PLACED PRIOR TO POURING THE WINGS, END CURTAIN WALLS AND HEADWALLS. THE EXTERIOR PRECAST UNITS SHALL BE UNDERMINED TO PROVIDE FOR THE WING FOOTINGS TO BE POURED TO THE DEPTH AND DIMENSIONS AS SHOWN ON THIS PLAN SHEET.

FOUNDATION CONDITIONING MATERIAL SHALL HAVE A THICKNESS OF AT LEAST 1'-0" BELOW THE BOTTOM OF THE PRECAST UNITS. THE MATERIAL SHALL BE FORMED AND SCREEDED TO THE PROPER ELEVATION AT LEAST 1'-0" BEYOND THE SIDES OF THE PRECAST UNITS.

THE PRECAST UNITS SHALL BE CAREFULLY POSITIONED ON THE PREPARED FOUNDATION CONDITIONING MATERIAL, FEMALE END UPGRADE WITH THE MALE END FULLY INSERTED AND EACH JOINT CHECKED FOR ALIGNMENT PRIOR TO JACKING THE UNIT INTO PLACE. SATISFACTORY FITTING AND PROPER GRADE SHALL BE MAINTAINED AS THE WORK PROCEEDS.

WHEN ANY PRECAST UNIT IS DAMAGED DURING HANDLING, THE ENGINEER AT HIS DISCRETION SHALL REJECT THE UNIT AS BEING UNFIT FOR INSTALLATION AND THE CONTRACTOR SHALL REMOVE SUCH REJECTED UNIT FROM THE PROJECT. MINOR DAMAGE TO THE UNIT MAY BE REPAIRED BY THE CONTRACTOR WHEN PERMITTED BY THE ENGINEER.

CARE SHALL BE TAKEN DURING BACKFILL AND COMPACTION OPERATION TO MAINTAIN ALIGNMENT AND PREVENT DAMAGE TO THE JOINTS. UNITS WHICH BECOME MISALIGNED, SHOW EXCESSIVE SETTLEMENT, OR HAVE OTHERWISE BEEN DAMAGED BY THE CONTRACTOR'S OPERATION SHALL AT THE DISCRETION OF THE ENGINEER BE REMOVED AND REPLACED BY THE CONTRACTOR AT NO COST TO THE DEPARTMENT OF TRANSPORTATION.

CONCRETE CHAMFERS ON EXTERIOR LONGITUDINAL EDGES OF THE PRECAST UNITS MAY BE AS PER THE FABRICATORS RECOMMENDATION. HOWEVER ALL WORKMANSHIP SHALL PROVIDE CONCRETE COVER OVER THE WELDED WIRE FABRIC AS SPECIFIED ON THE PLANS AND THE CONCRETE CHAMFERS CHOSEN SHALL IN NO WAY FUNCTIONALLY LESSEN THE DESIGN SHOWN ON THE PLANS.

DESIGN EARTH COVER = 2.40'

FOR PRECAST REINFORCED CONCRETE BOX CULVERT, SEE SPECIAL PROVISIONS.

CITY OF DURHAM
PUBLIC WORKS DEPARTMENT
APPROVED

ENGINEERING _____ DATE _____
STORM WATER _____ DATE _____
TRANSPORTATION _____ DATE _____
_____ DATE _____
_____ DATE _____

KCI Associates of North Carolina, P.A.
ENGINEERS • PLANNERS • ECOLOGISTS LICENSE NUMBER: C-0764
SUITE 220, LANDMARK CENTER II 4601 SIX FORKS RD. RALEIGH, N.C. 27609-5300 (919) 783-9214

# ALPINE ROAD CULVERT REPLACEMENT (SD-2018-02)

ALPINE ROAD
DURHAM, NORTH CAROLINA

# CULVERT STRUCTURAL DRAWINGS

# DETAILS

NORTH CAROLINA PROFESSIONAL SEAL 14114 ENGINEER ROBERT C. LARSON

Originally signed by Robert C. Larson, a Licensed Professional Engineer for KCI TECHNOLOGIES INC. on 2018.11.15 14:09:07 -05'00'

Robert C. Larson

11/15/18

| DRAWN BY: | CHECKED BY: |
|---|---|
| RJF | RCL |

DATE 6/30/2018

SCALE AS NOTED

PROJECT NO. 1809

SHEET NO. S3 of 4

<CONSTRUCTION DRAWINGS>

KCI JOB NO. 171800261

©COPYRIGHT 2017 THIS DOCUMENT AND THE DESIGN ARE THE PROPERTY OF HORVATH ASSOCIATES, P.A. ANY REPRODUCTION WITHOUT PRIOR WRITTEN CONSENT IS PROHIBITED

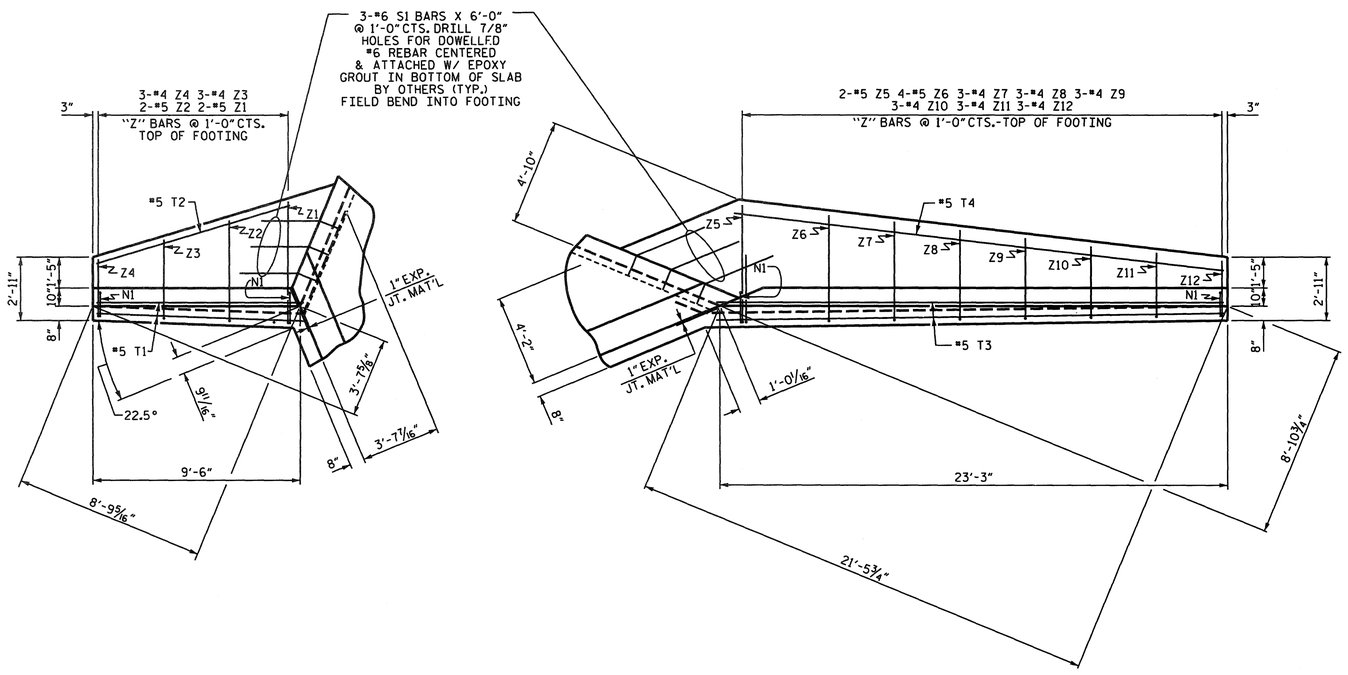


PLAN W2

PLAN W1

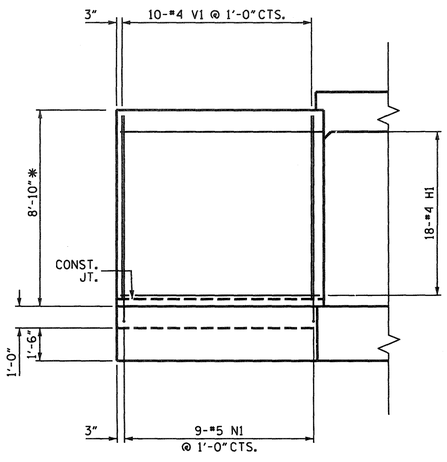


ELEVATION W2

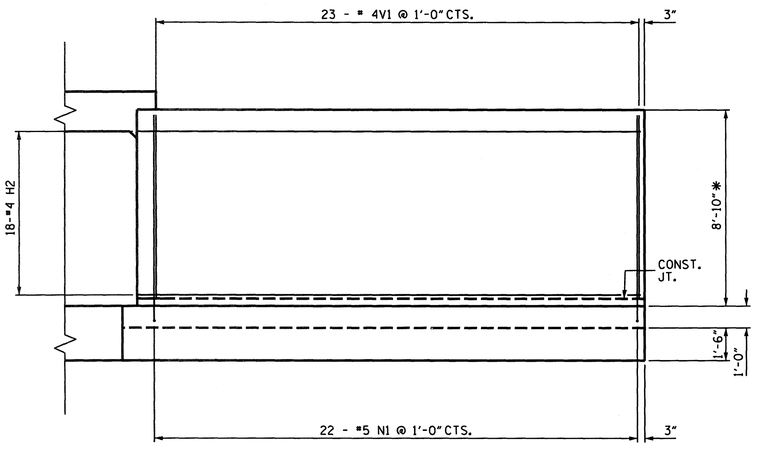


ELEVATION W1

* DIMENSIONS BASED ON ASSUMED 1'-0" WALL/ROOF THICKNESS. ADJUST AS REQUIRED

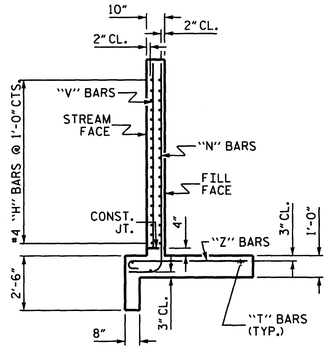


TYPICAL WING SECTION

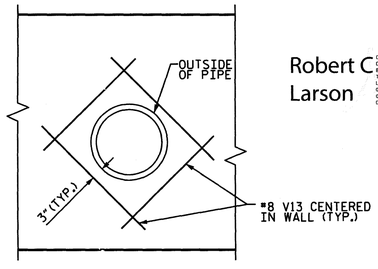


TYPICAL PIPE PENETRATION THRU WING

(3 REQUIRED, SEE SHEET C300)

CUT CONFLICTING REINFORCING 2" CLEAR OF PIPE AND PROVIDE ADDITIONAL REINFORCING AS SHOWN

## BAR TYPES

ALL BAR DIMENSIONS ARE OUT TO OUT.

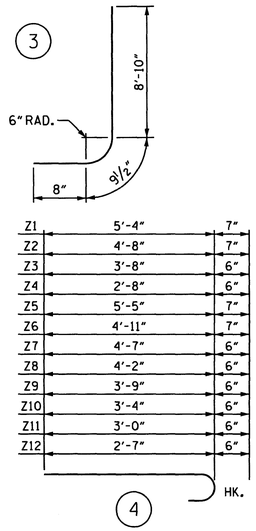


## BILL OF MATERIAL

| BAR | NO. | SIZE | TYPE | LENGTH | WEIGHT |
|---|---|---|---|---|---|
| H1 | 36 | #4 | STR | 8'-7" | 206 |
| H2 | 36 | #4 | STR | 21'-3" | 511 |
| | | | | | |
| N1 | 62 | #5 | 3 | 10'-1" | 652 |
| | | | | | |
| S1 | 12 | #6 | STR | 6'-0" | 108 |
| | | | | | |
| T1 | 4 | #5 | STR | 9'-6" | 40 |
| T2 | 2 | #5 | STR | 9'-3" | 19 |
| T3 | 4 | #5 | STR | 23'-3" | 97 |
| T4 | 2 | #5 | STR | 22'-7" | 47 |
| | | | | | |
| V1 | 66 | #4 | STR | 8'-1" | 356 |
| V13 | 12 | #8 | STR | 6'-0" | 192 |
| | | | | | |
| Z1 | 4 | #5 | 4 | 5'-11" | 25 |
| Z2 | 4 | #5 | 4 | 5'-3" | 22 |
| Z3 | 6 | #4 | 4 | 4'-2" | 17 |
| Z4 | 6 | #4 | 4 | 3'-2" | 13 |
| Z5 | 4 | #5 | 4 | 6'-0" | 25 |
| Z6 | 8 | #5 | 4 | 5'-6" | 46 |
| Z7 | 6 | #4 | 4 | 5'-1" | 20 |
| Z8 | 6 | #4 | 4 | 4'-8" | 19 |
| Z9 | 6 | #4 | 4 | 4'-3" | 17 |
| Z10 | 6 | #4 | 4 | 3'-10" | 15 |
| Z11 | 6 | #4 | 4 | 3'-6" | 14 |
| Z12 | 6 | #4 | 4 | 3'-1" | 12 |

REINFORCING STEEL FOR 4 WINGS 2473 LBS

CLASS A CONCRETE

| | | |
|---|---|---|
| 4 WINGS | 33.2 | CY |
| 2 HEADWALLS | 1.7 | CY |
| 2 END CURTAIN WALLS | 1.7 | CY |
| TOTAL | 36.6 | CY |

CITY OF DURHAM
PUBLIC WORKS DEPARTMENT
APPROVED

ENGINEERING _____ DATE _____
STORM WATER _____ DATE _____
TRANSPORTATION _____ DATE _____
_____ DATE _____
_____ DATE _____


KCI Associates of North Carolina, P.A.
ENGINEERS • PLANNERS • ECOLOGISTS LICENSE NUMBER: C-0764
SUITE 220, LANDMARK CENTER II 4601 SIX FORKS RD. RALEIGH, N.C. 27609-5290 (919) 783-9214


# ALPINE ROAD CULVERT REPLACEMENT (SD-2018-02)

ALPINE ROAD
DURHAM, NORTH CAROLINA

## CULVERT STRUCTURAL DRAWINGS

## WING WALL DETAILS

Robert C. Larson

NORTH CAROLINA PROFESSIONAL SEAL 14114 ENGINEER ROBERT C. LARSON

11/15/18

| DRAWN BY: | CHECKED BY: |
|---|---|
| RJF | RCL |

DATE 6/30/2018
SCALE AS NOTED
PROJECT NO. 1809
SHEET NO. S4 of 4

<CONSTRUCTION DRAWINGS>

KCI JOB NO. 171800261

©COPYRIGHT 2017 THIS DOCUMENT AND THE DESIGN ARE THE PROPERTY OF HORVATH ASSOCIATES, P.A. ANY REPRODUCTION WITHOUT PRIOR WRITTEN CONSENT IS PROHIBITED

# TRANSPORTATION MANAGEMENT PLAN

# DURHAM COUNTY

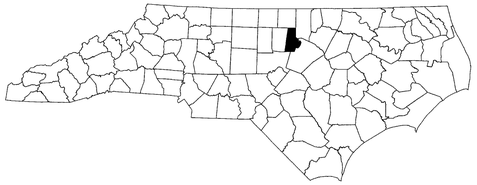

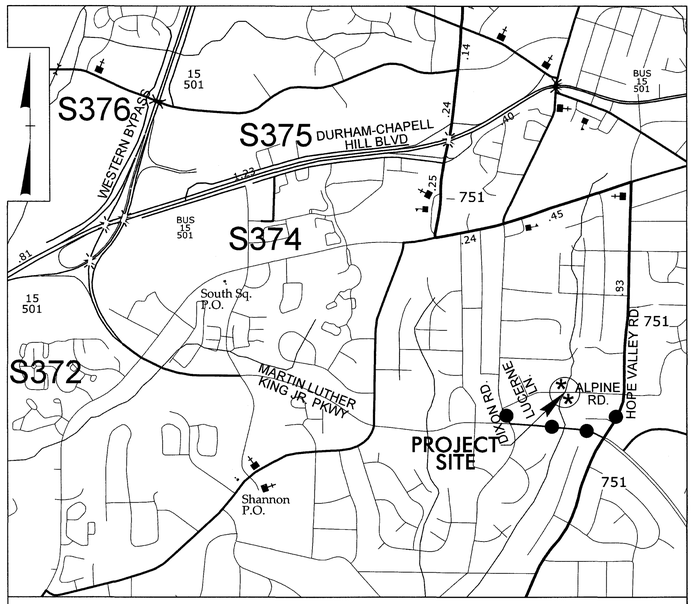


*VICINITY MAP*

* THIRD FORK CREEK TRIBUTARY C

OFF SITE DETOUR ROUTE

***LOCATION: ALPINE ROAD CULVERT CROSSING OVER THIRD FORK CREEK***

***TYPE OF WORK: GRADING, DRAINAGE, PAVING, AND STRUCTURE***

## *INDEX OF SHEETS*


| SHEET NO. | TITLE |
|---|---|
| TMP-1 | TITLE SHEET, VICINITY MAP, AND INDEX OF SHEETS |
| TMP-1A | LIST OF APPLICABLE ROADWAY STANDARD DRAWINGS AND LEGEND |
| TMP-1B | TRANSPORTATION OPERATIONS PLAN: (MANAGEMENT STRATEGIES, GENERAL NOTES, LOCAL NOTES, AND TEMPORARY TRAFFIC CONTROL PHASING) |
| TMP-2A | SPECIAL SIGN DESIGN |
| TMP-2B | SPECIAL SIGN DESIGN |
| TMP-3 | OFF SITE DETOUR DETAILS |


SHEET NO.
TMP-1

***PROJECT: ALPINE RD. CULVERT***

*WORK ZONE SAFETY & MOBILITY*
*"from the MOUNTAINS to the COAST"*

DEWAYNE SYKES, P.E. — *TRAFFIC CONTROL PROJECT ENGINEER*

BRYAN HOUGH, P.E. — *TRAFFIC CONTROL PROJECT DESIGN ENGINEER*

**DOCUMENT NOT CONSIDERED FINAL UNLESS ALL SIGNATURES COMPLETED**

KCI ASSOCIATES OF N.C.
*CIVIL ENGINEERS*
*ENVIRONMENTAL - CEI*
*LAND SURVEYING*
*SUBSURFACE UTILITY ENGINEERING*
4505 FALLS OF NEUSE ROAD
SUITE 400
RALEIGH, NORTH CAROLINA 27609
(919) 783-9214
WWW.KCI.COM

*APPROVED:* DocuSigned by: Bryan Hough 25E7D1EF3F3446... *DATE:* 11/14/2018

*SEAL*

NORTH CAROLINA PROFESSIONAL SEAL 036853 ENGINEER BRYAN E. HOUGH


HORVATH ASSOCIATES
CIVIL ENGINEERING LANDSCAPE ARCHITECTURE LAND PLANNING STORMWATER MANAGEMENT
16 CONSULTANT PLACE, SUITE 201
DURHAM, NORTH CAROLINA 27707
P 919.490.4990 F 919.490.8953
NORTH CAROLINA BOARD OF EXAMINERS FOR ENGINEERS AND SURVEYORS LICENSE NO.: C-0676
www.horvathassociates.com


**ALPINE ROAD CULVERT REPLACEMENT (SD-2018-02)**
ALPINE ROAD
DURHAM, NORTH CAROLINA

| | | |
|---|---|---|
| 1 | 8/3/2018 COD 1ST REVIEW COMMENTS | MJ |

DRAWN BY: MLJ
CHECKED BY: RLM
DATE: 3/21/2018
SCALE: AS NOTED
PROJECT NO.: 1809
SHEET NO.: **TMP-1**


©COPYRIGHT 2017 THIS DOCUMENT AND THE DESIGN ARE THE PROPERTY OF HORVATH ASSOCIATES, P.A. ANY REPRODUCTION WITHOUT PRIOR WRITTEN CONSENT IS PROHIBITED


<CONSTRUCTION DRAWINGS>

| PROJ. REFERENCE NO. | SHEET NO. |
|---|---|
| 2018-Alpine | TMP-1A |

# ROADWAY STANDARD DRAWINGS

THE FOLLOWING ROADWAY STANDARDS AS APPEAR IN "ROADWAY STANDARD DRAWINGS" - N.C. DEPARTMENT OF TRANSPORTATION - RALEIGH, N.C., DATED JANUARY 2018 ARE APPLICABLE TO THIS PROJECT AND BY REFERENCE HEREBY ARE CONSIDERED A PART OF THESE PLANS:

| STD. NO. | TITLE |
|---|---|
| 1101.01 | WORK ZONE WARNING SIGNS |
| 1101.02 | TEMPORARY LANE CLOSURES |
| 1101.03 | TEMPORARY ROAD CLOSURES |
| 1101.04 | TEMPORARY SHOULDER CLOSURES |
| 1101.05 | WORK ZONE VEHICLE ACCESSES |
| 1101.06 | WARNING SIGNS FOR BLASTING ZONES |
| 1101.11 | TRAFFIC CONTROL DESIGN TABLES |
| 1110.01 | STATIONARY WORK ZONE SIGNS |
| 1110.02 | PORTABLE WORK ZONE SIGNS |
| 1115.01 | FLASHING ARROW BOARDS |
| 1130.01 | DRUMS |
| 1135.01 | CONES |
| 1145.01 | BARRICADES |
| 1150.01 | FLAGGING DEVICES |
| 1160.01 | TEMPORARY CRASH CUSHION |
| 1165.01 | TRUCK MOUNTED ATTENUATOR |
| 1170.01 | PORTABLE CONCRETE BARRIER |
| 1180.01 | SKINNY - DRUMS |
| 1205.01 | PAVEMENT MARKINGS - LINE TYPES AND OFFSETS |
| 1205.02 | PAVEMENT MARKINGS - TWO LANE AND MULTILANE ROADWAYS |
| 1205.03 | PAVEMENT MARKINGS - EXITS AND ENTRANCE RAMPS |
| 1205.04 | PAVEMENT MARKINGS - INTERSECTIONS |
| 1205.05 | PAVEMENT MARKINGS - TURN LANES |
| 1205.06 | PAVEMENT MARKINGS - LANE DROPS |
| 1205.07 | PAVEMENT MARKINGS - PEDESTRIAN CROSSWALKS |
| 1205.08 | PAVEMENT MARKINGS - SYMBOLS AND WORD MESSAGES |
| 1205.09 | PAVEMENT MARKINGS - PAINTED ISLANDS |
| 1205.10 | PAVEMENT MARKINGS - SCHOOL AREAS |
| 1205.11 | PAVEMENT MARKINGS - RAILROAD CROSSINGS |
| 1205.12 | PAVEMENT MARKINGS - BRIDGES |
| 1205.13 | PAVEMENT MARKINGS - LANE REDUCTIONS |
| 1205.14 | PAVEMENT MARKINGS - ROUNDABOUTS |
| 1205.15 | PAVEMENT MARKINGS - SUPERSTREETS |
| 1250.01 | RAISED PAVEMENT MARKERS - INSTALLATION SPACING |
| 1251.01 | RAISED PAVEMENT MARKERS - (PERMANENT AND TEMPORARY) |
| 1261.01 | GUARDRAIL AND BARRIER DELINEATORS - INSTALLATION SPACING |
| 1261.02 | GUARDRAIL AND BARRIER DELINEATORS - TYPES AND MOUNTING |
| 1262.01 | GUARDRAIL END DELINEATION |
| 1264.01 | OBJECT MARKERS - TYPES |
| 1264.02 | OBJECT MARKERS - INSTALLATION |

# LEGEND

## GENERAL

- DIRECTION OF TRAFFIC FLOW
- NORTH ARROW
- WORK AREA

## SIGNALS

- EXISTING

## TRAFFIC CONTROL DEVICES

- BARRICADE (TYPE III)
- CONE
- DRUM  SKINNY DRUM  TUBULAR MARKER
- TEMPORARY CRASH CUSHION
- FLASHING ARROW BOARD
- FLAGGER
- LAW ENFORCEMENT
- TRUCK MOUNTED ATTENUATOR (TMA)
- CHANGEABLE MESSAGE SIGN

## TEMPORARY SIGNING

- PORTABLE SIGN
- STATIONARY SIGN
- STATIONARY OR PORTABLE SIGN

## PAVEMENT MARKERS

- CRYSTAL/CRYSTAL
- CRYSTAL/RED
- YELLOW/YELLOW

KCI
http://www.kci.com
Engineers • Planners • Scientists • Construction Managers
4505 Falls of Neuse Road, Suite 400
Raleigh, NC 27609-6270
Phone (919) 783-9214 • Fax (919) 783-9266

APPROVED: DocuSigned by: Bryan Hough 29B761EFEF9D446...

DATE: 11/14/2018

SEAL

NORTH CAROLINA PROFESSIONAL SEAL 036853 ENGINEER BRYAN E. HOUGH

DOCUMENT NOT CONSIDERED FINAL UNLESS ALL SIGNATURES COMPLETED

ROADWAY STANDARD DRAWINGS & LEGEND

HORVATH ASSOCIATES
CIVIL ENGINEERING LAND PLANNING
LANDSCAPE ARCHITECTURE STORMWATER MANAGEMENT
16 CONSULTANT PLACE, SUITE 201
DURHAM, NORTH CAROLINA 27707
P 919.490.4990 F 919.490.8953
NORTH CAROLINA BOARD OF EXAMINERS FOR ENGINEERS AND SURVEYORS LICENSE NO.: C-0676
www.horvathassociates.com

**ALPINE ROAD CULVERT REPLACEMENT (SD-2018-02)**

ALPINE ROAD
DURHAM, NORTH CAROLINA

| | | |
|---|---|---|
| 1 | 8/3/2018 COD 1ST REVIEW COMMENTS | MJ |

DRAWN BY: MLJ
CHECKED BY: RLM
DATE: 3/21/2018
SCALE: AS NOTED
PROJECT NO.: 1809
SHEET NO.: **TMP-1A**

©COPYRIGHT 2017 THIS DOCUMENT AND THE DESIGN ARE THE PROPERTY OF HORVATH ASSOCIATES, P.A. ANY REPRODUCTION WITHOUT PRIOR WRITTEN CONSENT IS PROHIBITED

<CONSTRUCTION DRAWINGS>

| PROJ. REFERENCE NO. | SHEET NO. |
|---|---|
| 2018-Alpine | TMP-1B |

## *MANAGEMENT STRATEGIES*

1. CLOSE ALPINE ROAD AND DETOUR TRAFFIC OFF SITE VIA DIXON ROAD, MARTIN LUTHER KING JR PARKWAY, AND CR 751 (HOPE VALLEY ROAD).

2. LOCAL ACCESS TO ALL RESIDENCES AND BUSINESSES WILL BE MAINTAINED BETWEEN CLOSURE POINTS AT ALL TIMES DURING CONSTRUCTION.

3. COORDINATION WITH CITY TRANSPORTATION STAFF IS NEEDED DURING CONSTRUCTION DUE TO SIGNAL UPGRADE/SIGN/MODIFICATION OF SIGNAL TIMING.

## *GENERAL NOTES*

CHANGES MAY BE REQUIRED WHEN PHYSICAL DIMENSIONS IN THE DETAIL DRAWINGS, STANDARD DETAILS, AND ROADWAY DETAILS ARE NOT ATTAINABLE TO MEET FIELD CONDITIONS OR RESULT IN DUPLICATE OR UNDESIRED OVERLAPPING OF DEVICES. MODIFICATION MAY INCLUDE: MOVING, SUPPLEMENTING, COVERING, OR REMOVAL OF DEVICES AS DIRECTED BY THE ENGINEER.

THE FOLLOWING GENERAL NOTES APPLY AT ALL TIMES FOR THE DURATION OF THE CONSTRUCTION PROJECT EXCEPT WHEN OTHERWISE NOTED IN THE PLAN OR DIRECTED BY THE ENGINEER.

TRAFFIC PATTERN ALTERATIONS

A) NOTIFY THE ENGINEER TWENTY ONE (21) CALENDAR DAYS PRIOR TO ANY TRAFFIC PATTERN ALTERATION.

SIGNING

A) PROVIDE SIGNING AND DEVICES REQUIRED TO CLOSE THE ROAD ACCORDING TO THE ROADWAY STANDARD DRAWINGS AND TRAFFIC CONTROL PLANS.

PROVIDE SIGNING REQUIRED FOR THE OFF SITE DETOUR ROUTE AS SHOWN IN THE TRAFFIC CONTROL PLANS.

B) COVER OR REMOVE ALL SIGNS AND DEVICES REQUIRED TO CLOSE THE ROAD WHEN ROAD CLOSURE IS NOT IN OPERATION.

COVER OR REMOVE ALL SIGNS REQUIRED FOR THE OFF SITE DETOUR WHEN THE DETOUR IS NOT IN OPERATION.

C) ENSURE ALL NECESSARY SIGNING IS IN PLACE PRIOR TO ALTERING ANY TRAFFIC PATTERN.

TRAFFIC CONTROL DEVICES

E) PLACE TYPE III BARRICADES WITH "ROAD CLOSED" SIGN R11-2 ATTACHED OF SUFFICIENT LENGTH TO CLOSE ENTIRE ROADWAY.

PAVEMENT MARKINGS AND MARKERS

F) INSTALL PAVEMENT MARKINGS AND PAVEMENT MARKERS ON THE FINAL SURFACE AS SHOWN IN THE FINAL PAVEMENT MARKING PLAN.

G) TIE PROPOSED PAVEMENT MARKING LINES TO EXISTING PAVEMENT MARKING LINES.

DRIVEWAYS

H) RESIDENTIAL DRIVEWAYS SHALL REMAIN ACCESSIBLE, UNOBSTRUCTED AND UNDISTURBED FROM EXIST. CONDITIONS AT ALL TIMES DURING CONSTRUCTION.

## *PHASING*

NOTE: BEFORE BEGINNING CONSTRUCTION THE CONTRACTOR SHALL PLACE ADVANCE WORK ZONE WARNING SIGNS ALONG ALPINE ROAD, (SEE RSD 1101.01, SHEET 3 OF 3)

STEP 1) USING ROADWAY STD. DRAWING 1101.03, SHEET 1 OF 9, CLOSE ALPINE ROAD AND DETOUR TRAFFIC OFF SITE AS SHOWN ON TMP-3.

STEP 2) REMOVE THE EXISTING STRUCTURE.

STEP 3) CONSTRUCT THE PROPOSED STRUCTURE AND ROADWAY -L- UP TO BUT NOT INCLUDING THE FINAL LIFT OF SURFACE COURSE.

STEP 4) PLACE THE FINAL LIFT OF SURFACE COURSE.

STEP 5) PLACE FINAL PAVEMENT MARKINGS AND MARKERS ACCORDING TO THE FINAL PAVEMENT MARKING PLANS.

STEP 6) REMOVE ALL WORK ZONE TRAFFIC CONTROL DEVICES AND SIGNING. OPEN ALPINE ROAD AND PLACE TRAFFIC ONTO THE FINAL PATTERN.

APPROVED: Digitally signed by Bryan Hough (39B761EFEF93446...)

DATE: 11/14/2018

SEAL

NORTH CAROLINA PROFESSIONAL SEAL 036853 ENGINEER BRYAN E. HOUGH

**DOCUMENT NOT CONSIDERED FINAL UNLESS ALL SIGNATURES COMPLETED**

TRANSPORTATION OPERATIONS PLAN

KCI Engineers • Planners • Scientists • Construction Managers
http://www.kci.com
4505 Falls of Neuse Road, Suite 400
Raleigh, NC 27609-6270
Phone (919) 783-9214 • Fax (919) 783-9266

HORVATH ASSOCIATES
CIVIL ENGINEERING LAND PLANNING
LANDSCAPE ARCHITECTURE STORMWATER MANAGEMENT
16 CONSULTANT PLACE, SUITE 201
DURHAM, NORTH CAROLINA 27707
P 919.490.4990 F 919.490.8953
NORTH CAROLINA BOARD OF EXAMINERS FOR ENGINEERS AND SURVEYORS LICENSE NO.: C-0676
www.horvathassociates.com

**ALPINE ROAD CULVERT REPLACEMENT (SD-2018-02)**
ALPINE ROAD
DURHAM, NORTH CAROLINA

| | | |
|---|---|---|
| 1 | 8/3/2018 COD 1ST REVIEW COMMENTS | MJ |

DRAWN BY: MLJ
CHECKED BY: RLM
DATE: 3/21/2018
SCALE: AS NOTED
PROJECT NO.: 1809
SHEET NO.: **TMP-1B**

©COPYRIGHT 2017 THIS DOCUMENT AND THE DESIGN ARE THE PROPERTY OF HORVATH ASSOCIATES, P.A. ANY REPRODUCTION WITHOUT PRIOR WRITTEN CONSENT IS PROHIBITED

<CONSTRUCTION DRAWINGS>

| PROJ. REFERENCE NO. | SHEET NO. |
|---|---|
| 2018-Alpine | TMP-2A |

SIGN NUMBER: SP-1
TYPE: D
QUANTITY: SEE PLANS

SIGN WIDTH: 3'-0"
HEIGHT: 2'-0"
TOTAL AREA: 6 Sq.Ft.

BORDER TYPE: RECESSED
RECESS: 0.38"
WIDTH: 0.63"
RADII: 1.50"

NO. Z BARS: N/A
LENGTH: N/A

BACKG COLOR: Fluorescent Orange
COPY COLOR: Black

| SYMBOL | X | Y | WID | HT |
|---|---|---|---|---|
| | | | | |
| | | | | |
| | | | | |
| | | | | |
| | | | | |
| | | | | |
| | | | | |

MAT'L: 0.080" ALUMINUM

USE NOTES: 1,2

1. Legend and border shall be direct applied black non-reflective sheeting.
2. Background shall be NC GRADE B flourescent orange retroreflective sheeting.

DESIGN BY: S. REILLY
CHECKED BY: B. HOUGH
DATE: MAY 22, 2018
PROJECT ID: 2018- Alpine
DIV: N/A

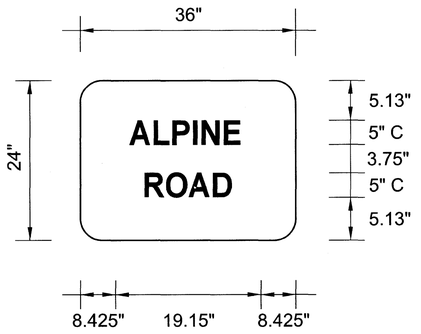


Spacing Factor is 1 unless specified otherwise

LETTER POSITIONS

Letter spacings are to start of next letter

| | | | | | | | | | | | | | | | | | | | | | | | | | | | Series/Size Text Length |
|---|---|---|---|---|---|---|---|---|---|---|---|---|---|---|---|---|---|---|---|---|---|---|---|---|---|---|---|
| | | A | L | P | I | N | E | | | | | | | | | | | | | | | | | | | | C 2000 |
| | 8.42 | 3.97 | 3.34 | 3.79 | 1.76 | 3.79 | 2.50 | 8.42 | | | | | | | | | | | | | | | | | | | 19.15 |
| | | R | O | A | D | | | | | | | | | | | | | | | | | | | | | | C 2000 |
| | 10.99 | 3.58 | 3.73 | 3.97 | 2.74 | 10.99 | | | | | | | | | | | | | | | | | | | | | 14.02 |
| | | | | | | | | | | | | | | | | | | | | | | | | | | | |
| | | | | | | | | | | | | | | | | | | | | | | | | | | | |
| | | | | | | | | | | | | | | | | | | | | | | | | | | | |
| | | | | | | | | | | | | | | | | | | | | | | | | | | | |
| | | | | | | | | | | | | | | | | | | | | | | | | | | | |

FILENAME: 2018- ALPINE DETOUR SIGN FACE LAYOUT

NORTH CAROLINA D.O.T. SIGN DETAIL

APPROVED: DocuSigned by: Bryan Hough 308761EFEF93446...
DATE: 11/14/2018
SEAL

NORTH CAROLINA PROFESSIONAL SEAL 036853 ENGINEER BRYAN F. HOUGH

DOCUMENT NOT CONSIDERED FINAL UNLESS ALL SIGNATURES COMPLETED

SPECIAL SIGN DESIGN

KCI http://www.kci.com
Engineers • Planners • Scientists • Construction Managers
4505 Falls of Neuse Road, Suite 400
Raleigh, NC 27609-6270
Phone (919) 783-9214 • Fax (919) 783-9266

HORVATH ASSOCIATES
CIVIL ENGINEERING LANDSCAPE ARCHITECTURE LAND PLANNING STORMWATER MANAGEMENT
16 CONSULTANT PLACE, SUITE 201
DURHAM, NORTH CAROLINA 27707
P 919.490.4990 F 919.490.8953
NORTH CAROLINA BOARD OF EXAMINERS FOR ENGINEERS AND SURVEYORS LICENSE NO.: C-0676
www.horvathassociates.com

ALPINE ROAD
CULVERT REPLACEMENT
(SD-2018-02)
ALPINE ROAD
DURHAM, NORTH CAROLINA

| | | | |
|---|---|---|---|
| 1 | 8/3/2018 COD 1ST REVIEW COMMENTS | MJ | |

DRAWN BY: MLJ
CHECKED BY: RLM
DATE: 3/21/2018
SCALE: AS NOTED
PROJECT NO.: 1809
SHEET NO.: TMP-2A

<CONSTRUCTION DRAWINGS>

©COPYRIGHT 2017 THIS DOCUMENT AND THE DESIGN ARE THE PROPERTY OF HORVATH ASSOCIATES, P.A. ANY REPRODUCTION WITHOUT PRIOR WRITTEN CONSENT IS PROHIBITED

| PROJ. REFERENCE NO. | SHEET NO. |
|---|---|
| 2018-Alpine | TMP-2B |

SIGN NUMBER: SP-2
TYPE: D
QUANTITY: SEE PLANS

SIGN WIDTH: 3'-0"
HEIGHT: 1'-6"
TOTAL AREA: 4.5 Sq.Ft.

BORDER TYPE: RECESSED
RECESS: 0.38"
WIDTH: 0.63"
RADII: 1.50"

NO. Z BARS: N/A
LENGTH: N/A

BACKG COLOR: Fluorescent Orange
COPY COLOR: Black

| SYMBOL | X | Y | WID | HT |
|---|---|---|---|---|
| | | | | |
| | | | | |
| | | | | |
| | | | | |
| | | | | |
| | | | | |
| | | | | |

MAT'L: 0.080" ALUMINUM

USE NOTES: 1,2

1. Legend and border shall be direct applied black non-reflective sheeting.
2. Background shall be NC GRADE B flourescent orange retroreflective sheeting.

DESIGN BY: S. REILLY
PROJECT ID: 2018- Alpine
CHECKED BY: B. HOUGH
DIV: N/A
DATE: MAY 22, 2018

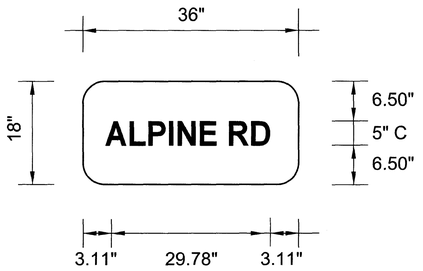


Spacing Factor is 1 unless specified otherwise

LETTER POSITIONS

Letter spacings are to start of next letter

| | | A | L | P | I | N | E | | R | D | | | | | | | | | | | | | | | | | Series/Size Text Length |
|---|---|---|---|---|---|---|---|---|---|---|---|---|---|---|---|---|---|---|---|---|---|---|---|---|---|---|---|
| | 3.11 | 3.97 | 3.34 | 3.79 | 1.76 | 3.79 | 2.50 | 4.11 | 3.58 | 2.74 | 3.11 | | | | | | | | | | | | | | | | C 2000 |
| | | | | | | | | | | | | | | | | | | | | | | | | | | | 29.78 |
| | | | | | | | | | | | | | | | | | | | | | | | | | | | |
| | | | | | | | | | | | | | | | | | | | | | | | | | | | |
| | | | | | | | | | | | | | | | | | | | | | | | | | | | |
| | | | | | | | | | | | | | | | | | | | | | | | | | | | |
| | | | | | | | | | | | | | | | | | | | | | | | | | | | |
| | | | | | | | | | | | | | | | | | | | | | | | | | | | |
| | | | | | | | | | | | | | | | | | | | | | | | | | | | |
| | | | | | | | | | | | | | | | | | | | | | | | | | | | |

FILENAME: 2018- ALPINE DETOUR SIGN FACE LAYOUT

NORTH CAROLINA D.O.T. SIGN DETAIL

APPROVED: DocuSigned by: Bryan Hough 39876 1EFEF93446...
DATE: 11/14/2018
SEAL

NORTH CAROLINA PROFESSIONAL SEAL 036853 ENGINEER BRYAN E. HOUGH

DOCUMENT NOT CONSIDERED FINAL UNLESS ALL SIGNATURES COMPLETED

SPECIAL SIGN DESIGN

KCI http://www.kci.com
Engineers • Planners • Scientists • Construction Managers
4505 Falls of Neuse Road, Suite 400
Raleigh, NC 27609-6270
Phone (919) 783-9214 • Fax (919) 783-9266

HORVATH ASSOCIATES
CIVIL ENGINEERING LANDSCAPE ARCHITECTURE LAND PLANNING STORMWATER MANAGEMENT
16 CONSULTANT PLACE, SUITE 201
DURHAM, NORTH CAROLINA 27707
P 919.490.4990 F 919.490.8953
NORTH CAROLINA BOARD OF EXAMINERS FOR ENGINEERS AND SURVEYORS LICENSE NO.: C-0676
www.horvathassociates.com

ALPINE ROAD
CULVERT REPLACEMENT
(SD-2018-02)
ALPINE ROAD
DURHAM, NORTH CAROLINA

| | | | |
|---|---|---|---|
| 1 | 8/3/2018 COD 1ST REVIEW COMMENTS | MJ | |

DRAWN BY: MLJ
CHECKED BY: RLM
DATE: 3/21/2018
SCALE: AS NOTED
PROJECT NO.: 1809
SHEET NO.: TMP-2B

<CONSTRUCTION DRAWINGS>

©COPYRIGHT 2017 THIS DOCUMENT AND THE DESIGN ARE THE PROPERTY OF HORVATH ASSOCIATES, P.A. ANY REPRODUCTION WITHOUT PRIOR WRITTEN CONSENT IS PROHIBITED

| PROJ. REFERENCE NO. | SHEET NO. |
|---|---|
| 2018-Alpine | TMP-3 |

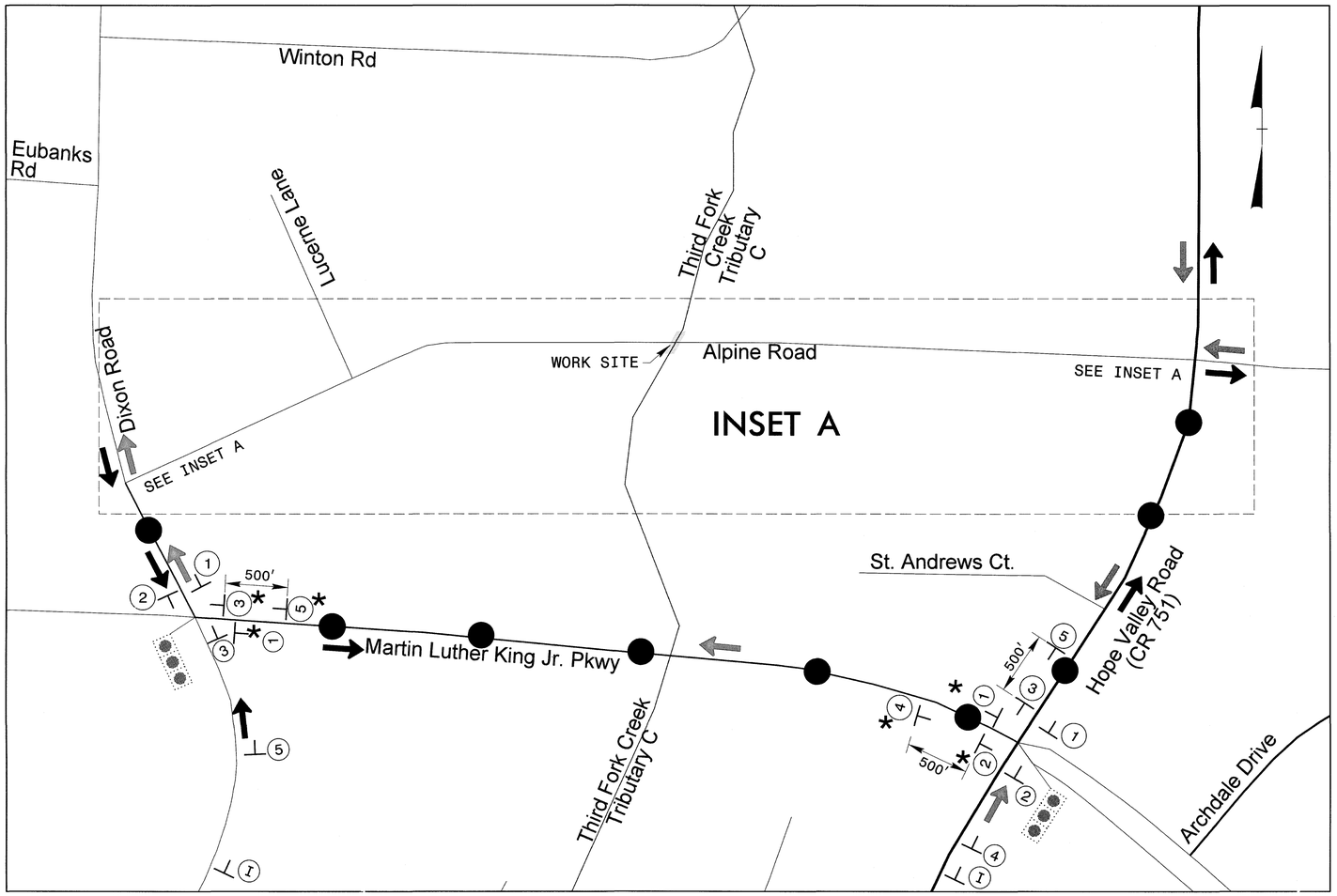


DETOUR ROUTE

* INSTALL 2 SIGNS (ONE SIGN TO BE LOCATED WITHIN THE MEDIAN OF MLK JR PARKWAY)

## INSET A
SIGNING SCHEMATIC

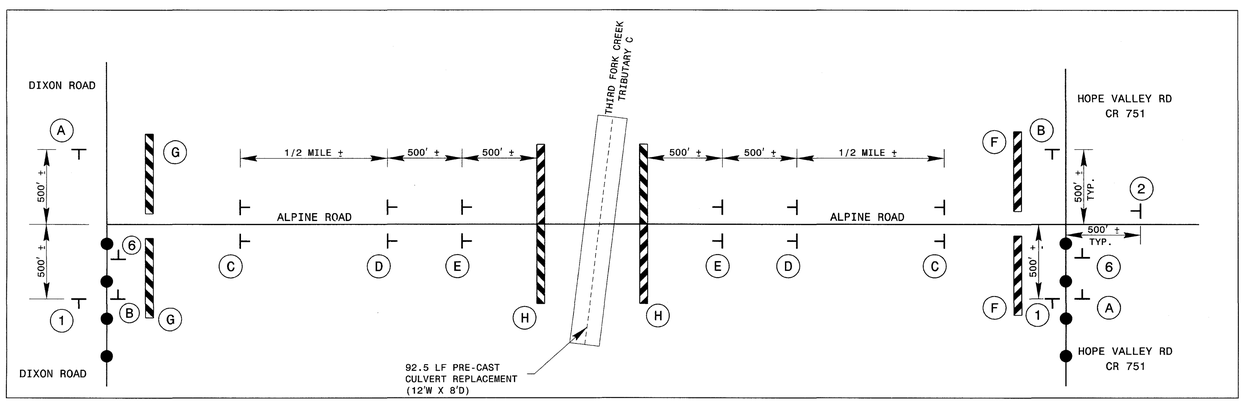


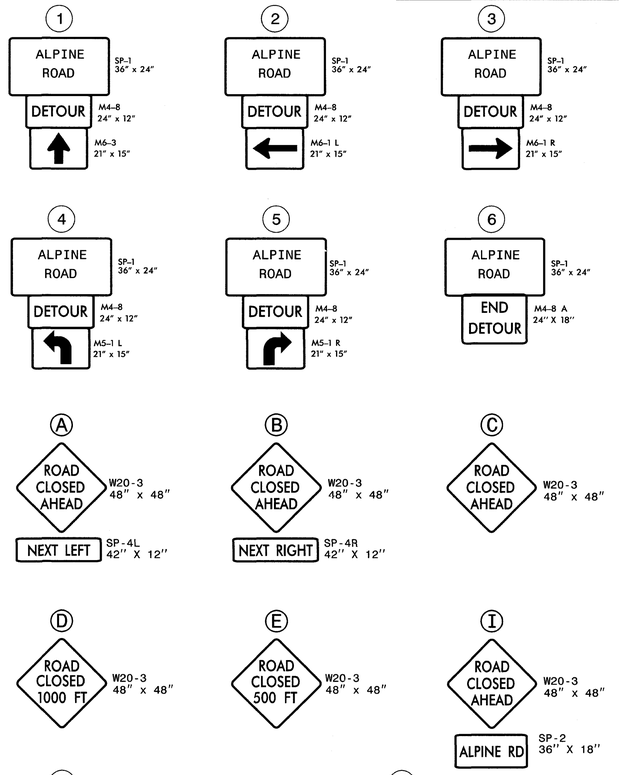


CITY OF DURHAM
PUBLIC WORKS DEPARTMENT
APPROVED

ENGINEERING _____ DATE _____
STORM WATER _____ DATE _____
TRANSPORTATION _____ DATE 12-21-18
_____ DATE _____
_____ DATE _____

NOTES:
1. REFER TO ROADWAY STANDARD DRAWING 1101.03, SHEET 1 OF 9 FOR APPLICABLE NOTES.
2. ALL SIGN SPACING DIMENSIONS ARE APPROXIMATE. FIELD ADJUST AS NECESSARY OR AS DIRECTED BY THE ENGINEER.
3. SEE SHEETS TMP-2A & TMP-2B FOR THE SPECIAL SIGN DESIGN
4. ALL DETOUR SIGN LOCATIONS ARE APPROXIMATE.


KCI
http://www.kci.com
Engineers • Planners • Scientists • Construction Managers
4505 Falls of Neuse Road, Suite 400
Raleigh, NC 27609-6270
Phone (919) 783-9214 • Fax (919) 783-9266


APPROVED: DocuSigned by: Bryan Hough 398761EFEF93446...
DATE: 11/14/2018
SEAL

NORTH CAROLINA PROFESSIONAL SEAL 036853 ENGINEER BRYAN E. HOUGH

DOCUMENT NOT CONSIDERED FINAL UNLESS ALL SIGNATURES COMPLETED

OFF SITE DETOUR DETAILS


HORVATH ASSOCIATES
CIVIL ENGINEERING LANDSCAPE ARCHITECTURE LAND PLANNING STORMWATER MANAGEMENT
16 CONSULTANT PLACE, SUITE 201
DURHAM, NORTH CAROLINA 27707
P 919.490.4990 F 919.490.8953
NORTH CAROLINA BOARD OF EXAMINERS FOR ENGINEERS AND SURVEYORS LICENSE NO.: C-0676
www.horvathassociates.com


# ALPINE ROAD CULVERT REPLACEMENT (SD-2018-02)
ALPINE ROAD
DURHAM, NORTH CAROLINA

| | | |
|---|---|---|
| 1 | 8/3/2018 COD 1ST REVIEW COMMENTS | MJ |

DRAWN BY: MLJ
CHECKED BY: RLM
DATE: 3/21/2018
SCALE: AS NOTED
PROJECT NO.: 1809
SHEET NO.: TMP-3

<CONSTRUCTION DRAWINGS>

©COPYRIGHT 2017 THIS DOCUMENT AND THE DESIGN ARE THE PROPERTY OF HORVATH ASSOCIATES, P.A. ANY REPRODUCTION WITHOUT PRIOR WRITTEN CONSENT IS PROHIBITED

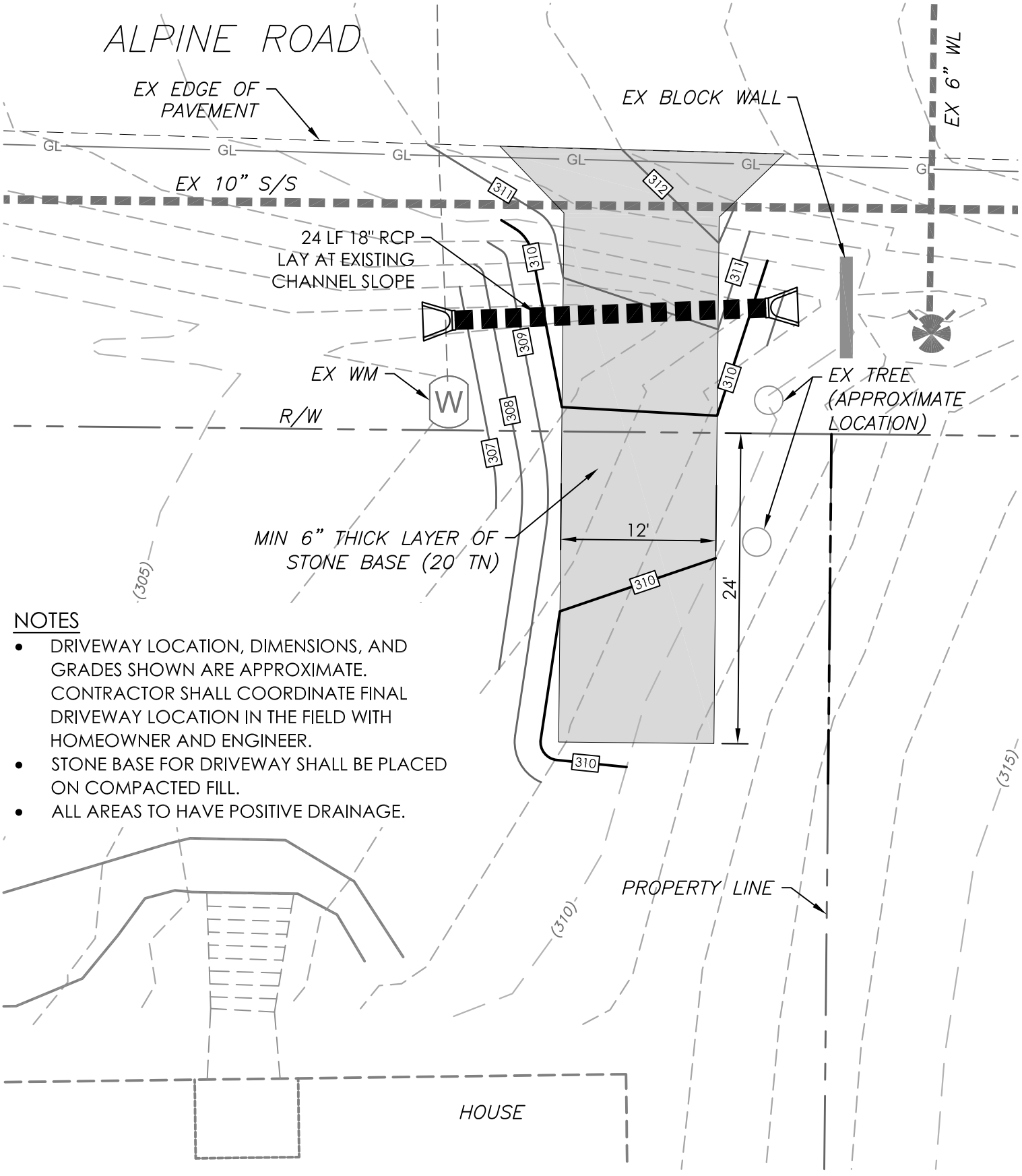


NOTES

- DRIVEWAY LOCATION, DIMENSIONS, AND GRADES SHOWN ARE APPROXIMATE. CONTRACTOR SHALL COORDINATE FINAL DRIVEWAY LOCATION IN THE FIELD WITH HOMEOWNER AND ENGINEER.
- STONE BASE FOR DRIVEWAY SHALL BE PLACED ON COMPACTED FILL.
- ALL AREAS TO HAVE POSITIVE DRAINAGE.

# 2431 ALPINE ROAD
# DRIVEWAY PLAN

0 5 10 20

SCALE: 1" = 10'

N